CHALMERS
UNIVERSITY OF TECHNOLOGY



Can one hear the shape of a flat torus?

A look at whether isospectrality gives isometry

Master's thesis in Engineering Mathematics and Computational Science

ERIK NILSSON

Department of Mathematical Sciences
CHALMERS UNIVERSITY OF TECHNOLOGY
Gothenburg, Sweden 2020

Master's thesis 2020:NN

Can one hear the shape of a flat torus?

A look at whether isospectrality gives isometry

ERIK NILSSON



CHALMERS
UNIVERSITY OF TECHNOLOGY

Department of Mathematical Sciences
Chalmers University of Technology
Gothenburg, Sweden 2020

The isospectral problem
for flat tori
A look at whether isospectrality gives isometry
ERIK NILSSON

© ERIK NILSSON, 2020.

Supervisor: Prof. J. Rowlett, Department of Mathematical Sciences
Examiner: Prof. M. Raum, Department of Mathematical Sciences

Master's Thesis 2020:NN
Department of Mathematical Sciences
Chalmers University of Technology
SE-412 96 Gothenburg
Telephone +46 31 772 1000

Cover: The embedded flat torus $\mathbb{R}^2/\mathbb{Z}^2$ without stretching, courtesy of Hévéa project "http://hevea-project.fr/".

Typeset in LaTeX
Printed by Chalmers Reproservice
Gothenburg, Sweden 2020

Can one hear the shape of a flat torus?
A look at whether isospectrality gives isometry
ERIK NILSSON
Chalmers University of Technology

Abstract

Perhaps it was Milnor's article, published two years prior, that triggered Mark Kac in 1966 to ask the famous question of whether one could hear the shape of a drum. If one were to somewhat liberally define a drum as any kind of Riemannian manifold in any dimension, then what Milnor showed was an example to the contrary; namely that there exist two isospectral yet non-isometric *flat tori* living in 16-dimensional space. The question of Kac in turn spurred a great wave of mathematical research within the field which we today refer to as spectral geometry, finally culminating in the article by Gordon, Webb and Wolpert[28] showing that no; "One cannot hear the shape of a drum." During these years however, a huge number of new questions have been born out of the search, making spectral geometry a vibrant field of study today. Looking back to Milnor then, it is clear that the flat torus holds a special place in the field (regardless of how one chooses to define a drum!). Yet, with the exception of a few articles, the flat torus seems to have been forgotten in the context of its spectral geometric conception: the lowest dimension for which one can exhibit an isospectral non-isometric pair of flat tori is a question discussed by few. In the wake of this great travesty the ensuing text was written.

Keywords: flat torus, isospectral, isometric, quadratic form, theta series, lattice, differential geometry, Riemannian geometry, spectral geometry, number theory.

Acknowledgements

The author would like to thank his supervisor Julie Rowlett for her very dedicated and friendly support, which has been most helpful during moments of doubt.

Erik Nilsson, Göteborg, June 2019

Contents

1 Introduction **1**
- 1.1 A problem in language . . . 2
- 1.2 Terminology . . . 2
- 1.3 Reading guide . . . 3

2 Preliminary theory **5**
- 2.1 Lattices . . . 5
- 2.2 Dual lattices . . . 7
- 2.3 Tori . . . 9

3 The flat torus as a Riemannian manifold **13**
- 3.1 The flat torus as a smooth quotient manifold . . . 13
- 3.2 Inheritance of the Euclidean metric . . . 17
- 3.3 Isometry of flat tori . . . 19
- 3.4 The Laplace operator on a Riemannian manifold . . . 22

4 The eigenvalue equation on a flat torus **23**
- 4.1 Recasting to Euclidean space . . . 24
- 4.2 Well-posedness on the fundamental domain . . . 25
- 4.3 Revealing the spectrum . . . 27
- 4.4 Fourier series and Poisson summation . . . 33
- 4.5 Spectral implications of Poisson summation . . . 35

5 Counterexamples in dimensions 16, 12 and 4 **39**
- 5.1 Working with theta series in high dimensions . . . 39
- 5.2 Conway and Sloane's 4-dimensional family . . . 48

6 Spectrometry of low-dimensional flat tori **53**
- 6.1 Constructing the bijection . . . 53
- 6.2 Poisson summation and quadratic forms . . . 55
- 6.3 Low-dimensional and rectangular flat tori . . . 55
- 6.4 The case of three dimensions . . . 58

A Appendix A: Differential geometry preliminaries **I**
- A.1 Smooth quotient manifolds . . . I
- A.2 Tangent spaces, pushforwards and pullbacks . . . V
- A.3 Constructing the Laplace operator on a Riemannian manifold . . . IX

B Appendix B: Spectral theory of compact operators and bilinear forms **XIII**
B.1 A taste of finite dimensions XIII
B.2 Compact and self-adjoint operators in infinite dimensions XIV
B.3 Spectral theorem for bilinear forms XV

C Appendix C: Reduction of quadratic forms **XVII**
C.1 Successive minima XVII
C.2 Reducing a basis XVIII

1

Introduction

In 1964, John Milnor was to able to show the existence two isospectral (in the sense of the Laplace-Beltrami operator) flat tori that are distinct as Riemannian manifolds [17]. The construction was done by way of Witt[27], in 16 dimensions. This is what we call an inverse problem of spectral geometry; given the eigenvalue spectrum of some Riemannian manifold, what can we deduce about the manifold itself? It turns out that we can deduce quite a lot, including but not limited to the volume and the dimension of the manifold. Thus Milnor's counterexample was important in the sense that it showed restrictions on what the spectrum could glean from the characteristics of a Riemannian manifold.

Throughout this text we shall consider the eigenvalues of the Laplace-operator on a closed Riemannian manifold (M, g) from the following problem.

Eigenvalue problem

Find all $\lambda \in \mathbb{R}$ for which there exists some nonzero function $f \in C^\infty(M)$ such that

$$-\Delta f = \lambda f \tag{1.1}$$

The set of these eigenvalues is called spectrum and two manifolds are said to be isospectral if their respective spectra are the same. We say that the manifolds are isometric if, intuitively speaking, we can find a smooth length-and-angle-preserving map between them. Intuitively the isospectral problem, that is the problem of whether the spectrum of a certain manifold contains enough information to characterise it, can be interpreted as asking whether one can hear the shape of the manifold. The interpretation stems from the Helmholtz equation describing the vibration modes of a clamped, elastic membrane. See Chapter 4 for the rigorous introduction to these topics.

Since 1964 several examples of isospectral but not isometric flat tori have been discovered in lower dimensions: among them 12 [13], 8 [12] and even 4 [20][7]. However, in dimensions 1, 2 and 3 it has been shown that all isospectral pairs of flat tori are also isometric. The last proof for 3 dimensions was given by Schiemann[21] in 1990 which makes it a quite recent result. Despite this, the answer to the question of finding the lowest dimension inside which one can exhibit a pair of isospectral yet non-isometric flat tori seems to be relatively unknown, even among experts in the field of spectral geometry. Why is this so?

1.1 A problem in language

For an analyst or geometer the isospectral problem for flat tori shares a common context and language within differential geometry. Supposedly, if such a person would be looking for the lowest dimension of isospectral non-isometric flat tori, then she would search the web using the language she knows. Unfortunately none of the cited articles above except for Milnor's even *mention* flat tori. Hence there is a linguistic problem present, and it is due to the following: the problem of isospectrality for flat tori is equivalent to a problem in number theory. Solving the problem in either framework solves the problem in the other, and indeed the problems have been solved for the most part in the number theoretic realm.

Differential geometric frame	Number theoretic frame
Does isospectrality of any pair of n-dimensional flat tori imply their isometry?	Are n-dimensional positive definite quadratic forms determined up to integral equivalence by their representation numbers, or *theta series*?

This so called theta series is the power series representation of these representation numbers, and it turns out to be the same thing as the partition function of differential geometry, i.e. the trace of the heat kernel. We discuss this aspect in more detail in later chapters. The corresponding problem in number theory is much older and thus the language of quadratic forms makes a potentially more impactful frame in which to solve the problem. At least it is within that frame that the methods have been developed and so as a consequence it is there which we will need to spend most of our time.

The situation improves when looking for textbooks on the subject. In some of these we can find mentions and even derivations of some of the results. However in most cases the topic is only briefly mentioned, almost as a footnote. For example none of the standard books in Riemannian geometry, like [16], [2], [11], [9] and [23], mention the flat torus in the context of the isospectral problem. Moreover specific textbooks within spectral geometry, besides suffering from the collective barrier of entry that is some prior knowledge of differential geometry, do not in general cover the topic. Indeed out of [24], [14], [8], [4] and [3], only [14], [8] and [3] mention it (in level of detail corresponding to order of mention). Thus if an initially interested student were to give up her search, one would be justified in forgiving her. However, it should of course be mentioned that no book has any real obligation to cover any specific topic.

1.2 Terminology

The phrase 'a pair of isospectral flat tori are isometric' and its variants become lengthy and tedious to write and read after only a couple of occurrences. To remedy the situation we have decided to introduce some new terminology. Previously in

e.g. [6], the colloquial term *audible* has been used for a property of a Riemannian manifold that is determined by the spectrum, connecting to the intuitive picture of a beating drum. We shall call an audible property a *spectral invariant*. With this term one would say 'flat tori are audible' instead of 'all isospectral flat tori are isometric.' However note that it doesn't really work on a pairwise level (which we need), the phrase 'this pair of flat tori are not audible' does not make much sense - what it means for a pair of objects to be audible can be slightly ambiguous. Therefore we introduce the following

Definition 1.1.
Let $\mathfrak{C}$ be a nonempty set of Riemannian manifolds. We say that $\mathfrak{C}$ is ***spectrometric*** *if the isometry class of each element $M \in \mathfrak{C}$ (i.e. the set of manifolds isometric to this element) is completely determined by the spectrum of the Laplace-operator on M. In other words, if $M, N \in \mathfrak{C}$ are isospectral then they are isometric.*

In physics the term *spectrometry* can mean several things, but in general it alludes to measuring something with the help of some kind of spectrum. For instance, in Rutherford back-scattering spectrometry the structure and composition of materials is found by measuring the back-scattering of a high energy beam of ions impinging on a sample. This fits neatly with what we want the term to mean in our context.

1.3 Reading guide

Care has been taken to make the text readable for both experts and complete novices in the field of differential geometry. That being said, the introduction to Chapter 3 will be very difficult for the novice since much of the important motivation and detail of concepts like manifolds, charts and tangent spaces is omitted. Some of these details, but not all are given in Appendix A. If one is nonetheless determined to understand this chapter without prior knowledge it is advised to have a companion introductory book on the subject close by, see any of [16][2][11][9][23].

The text is meant to be read from "top to bottom". Chapter 2 is an easy going introduction to the central objects of study and should hopefully be readable by anyone with an undergraduate background in mathematics. As mentioned, in Chapter 3, but also in Chapter 4, we dive into the theoretical background needed to fully appreciate the later results given in Chapter 5 and Chapter 6. The expert might want to start reading at one of these later chapters, they can be read in any preferred order and they do not depend on each other. If the novice does not care much for the equivalence of the problems and is able to take certain results on faith, then it is possible also for her to start at Chapter 4 (or even Chapter 5), given that the results from thereafter are understandable without much knowledge of differential geometry.

2

Preliminary theory

2.1 Lattices

A lattice is an object that we encounter every day or at least every week [1]. Indeed, the plastic containers from which you pick your vegetables, taken as parts of a whole, precisely take the shape of a (local) lattice. Another example is the tiling of a chess board. In analysis they are an ever-extending set of evenly spaced points, formally as a subset of $\mathbb{R}^n$ we define a **lattice** as a set

$$\Gamma := \left\{ \sum_{i=1}^{n} \alpha_i a_i : \alpha_i \in \mathbb{Z} \right\},$$

where the $\{a_i\}_{i=1}^n$ are column vectors forming a basis[2] of $\mathbb{R}^n$.

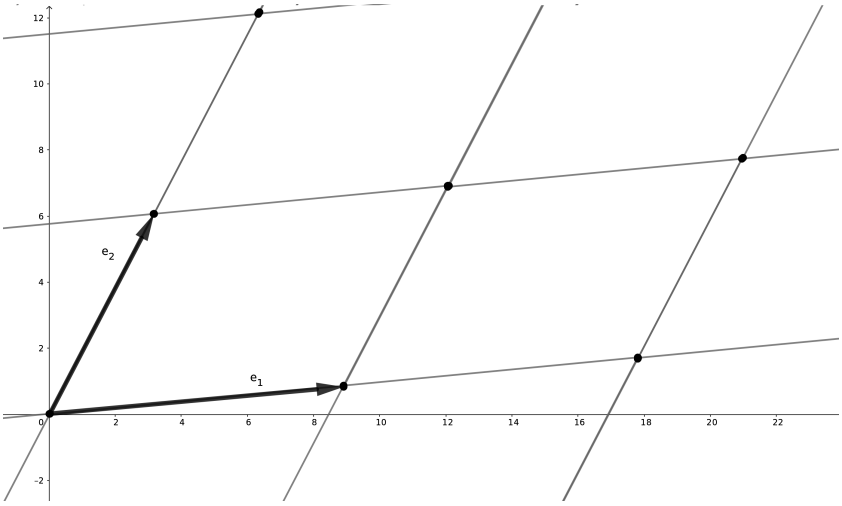

Figure 2.1: The lattice of a set of boxes for oranges, more abstractly represented in $\mathbb{R}^2$.

The last criterion is important since the vectors need to be independent in order to create a lattice of appropriate dimension. Note that these basis vectors a_i are the only degrees of freedom available from which to create the lattice. Therefore

[1] If you don't go grocery shopping very often.

[2] It is of course possible to consider lattices with bases in $\mathbb{R}^d$, with $d < n$ but this is more than we will require. We will work with so called full-rank lattices.

they completely characterise the lattice and, taking $A = (a_1\ a_2 \dots a_n)$, we write the equivalent formulation

$$\Gamma = \{A\alpha : \alpha \in \mathbb{Z}^n\} = A\mathbb{Z}^n.$$

Basis matrices A of this type are invertible since their columns are linearly independent. They actually form a group under matrix multiplication called the *general linear group of degree n*, denoted by $GL_n(\mathbb{R})$ with $\mathbb{R}$ meaning that the entries of the matrix (and its inverse) are real numbers. We shall also work with $GL_n(\mathbb{Z})$ which has the same meaning, replacing $\mathbb{R}$ by $\mathbb{Z}$. It is worth to note that it is a necessary condition for $A \in GL_n(\mathbb{Z})$ to have determinant $\det(A) = \pm 1$, due to the requirement that A^{-1} needs integer entries. Elements of $GL_n(\mathbb{Z})$ are called unimodular matrices.

The fact that we can represent the lattice by a basis matrix is interesting; it begs the question of whether we can have different bases for the same lattice? Formally, if every column of one basis can be written as a $\mathbb{Z}$-linear combination of columns from another basis *and vice versa*, then surely the bases are equivalent? Indeed, we have

Proposition 2.1 (Lattices are equal up to $GL_n(\mathbb{Z})$)**.**
Two lattices $\Gamma = A\mathbb{Z}^n$ *and* $\Gamma' = A'\mathbb{Z}^n$ *are equivalent IFF*

$$A' = AB, \text{ for some } B \in GL(n, \mathbb{Z}).$$

Proof. If $\Gamma = \Gamma'$ then any column a_i of A is an element of Γ' so that, recalling the definition above, $a_i = A'b$ where $b \in \mathbb{Z}^n$. Therefore we have that $A = A'B$, where $B \in \mathbb{Z}^{n\times n}$. Similarly for $C \in \mathbb{Z}^{n\times n}$ we have $A' = AC$ so that $A' = A'BC \implies BC = I$.

For the other direction we suppose $A' = AB$, for some $B \in \mathrm{GL}(n, \mathbb{Z})$. For some $\alpha \in \mathbb{Z}^n$ the key lies in observing that $\beta = B\alpha$ is again an element of $\mathbb{Z}^n$, since the entries of B are integers. But the entries of B^{-1} are also integers, so the mapping $B : \mathbb{Z}^n \to \mathbb{Z}^n$ is a bijection. Thus,

$$\Gamma' = \{A'\alpha : \alpha \in \mathbb{Z}^n\} = \{A(B\alpha) : \alpha \in \mathbb{Z}^n\} = \{A\beta : \beta \in \mathbb{Z}^n\} = \Gamma.$$

□

We can view this as saying that $\mathbb{Z}^n$ absorbs elements of $GL_n(\mathbb{Z})$. This relation in fact forms an equivalence relation; $A \sim A'$ IFF $A' = AB$ & $B \in GL_n(\mathbb{Z})$. Thus we may consider the set of lattices as the quotient space

$$GL_n(\mathbb{R}) \Big/ GL_n(\mathbb{Z}) = GL_n(\mathbb{R}) \Big/ \sim = \{\{A' \in GL_n(\mathbb{R}) : A' \sim A\} : A \in GL_n(\mathbb{R})\}.$$

This is the set of equivalence classes in $GL_n(\mathbb{R})$ wherein two matrices are considered equivalent if they are equal up to multiplication by an element of $GL_n(\mathbb{Z})$.

In other words, the basis matrix defining the lattice is not unique, and one can wonder which basis would make the best representative. Indeed this leads to a concept called lattice reduction[3], whose history goes as far back as Lagrange[15]. We shall encounter this concept in action in Chapter 6. We should thus comment

[3]Today it is a very important concept in computer science and cryptography.

that denoting a lattice Γ by Γ_A for one of its basis matrices A, while appealing, is not good notation since A is not unique.

There is another notion of equivalence between lattices, called congruence. We say that two lattices are **congruent** if one can be transformed into the the other via an orthogonal automorphism. That is, Γ and Γ' are congruent if there exists $C \in O_n(\mathbb{R}) := \left\{C \in GL_n(\mathbb{R}) : CC^\intercal = I\right\}$ such that $\Gamma' = C\Gamma$. The notion will come into play in Chapter 3 and stay from there throughout the rest of the text.

Later on in Chapter 5 we will use lattices as building blocks to construct other lattices which will serve as tools to disprove spectrometry in higher dimensions. One of these tools requires some discussion for the uninitiated. Given $n_1, n_2 \in \mathbb{Z}$ and two lattices $\Gamma_1 = A_1\mathbb{Z}^{n_1}$, $\Gamma_2 = A_2\mathbb{Z}^{n_2}$ we identify Γ_k with its identity image with respect to the map sending $\mathbb{R}^{n_k} \to \mathbb{R}^{n_k} \times \{0\} \subset \mathbb{R}^n$. Then $\gamma_1 \in \Gamma_1$ denotes a vector $(\gamma_1 \underbrace{0 \dots 0}_{\#n_2})^\intercal$ in $\mathbb{R}^{n_1+n_2}$. With this we construct the **orthogonal sum**

$$\Gamma_1 \overset{\perp}{+} \Gamma_2 := \left\{\gamma = \gamma_1 + \gamma_2 : \gamma_1 \in \Gamma_1, \gamma_2 \in \Gamma_2 \;\&\; \gamma_1^\intercal \gamma_2 = 0\right\}. \tag{2.1}$$

Can we write the basis of $\Gamma_1 \overset{\perp}{+} \Gamma_2$ as some mashup of the bases of its underlying lattices Γ_1 and Γ_2? Yes we can.

Proposition 2.2 (The basis for the orthogonal sum lattice is given by the bases for its summands)**.**
A basis for $\Gamma_1 \overset{\perp}{+} \Gamma_2$ *is given by* $\begin{pmatrix} A_1 & 0 \\ 0 & A_2 \end{pmatrix}$.

Proof. Take $\alpha = (\alpha_1\alpha_2)^\intercal \in \mathbb{Z}^{n_1+n_2}$ and compute

$$\begin{pmatrix} A_1 & 0 \\ 0 & A_2 \end{pmatrix} \begin{pmatrix} \alpha_1 \\ \alpha_2 \end{pmatrix} = \begin{pmatrix} A_1\alpha_1 \\ 0 \end{pmatrix} + \begin{pmatrix} 0 \\ A_2\alpha_2 \end{pmatrix}.$$

Note that $\begin{pmatrix} A_1\alpha_1 \\ 0 \end{pmatrix} \in \Gamma_1$ and $\begin{pmatrix} 0 \\ A_2\alpha_2 \end{pmatrix} \in \Gamma_2$, while their inner product is 0. □

2.2 Dual lattices

For our purposes the concept of the **dual lattice** of a lattice will be of great importance; the lengths of its vectors will basically correspond to the set of eigenvalues of the Laplace-operator to the flat torus defined by said lattice. The dual lattice is defined to be the set

$$\Gamma^* := \left\{\gamma^* \in \mathbb{R}^n : \gamma^\intercal \gamma^* \in \mathbb{Z} \;\; \forall \gamma \in \Gamma\right\}.$$

The definition is more natural than it looks. The dual space of Γ is defined to be the set of functionals $\gamma^* : \Gamma \to \mathbb{Z}$ that are linear in Γ and bounded in the norm of $\mathbb{R}^n$. We know by the Riesz representation theorem that any such functional is represented by the application to Γ of another vector in Γ through the inner product.

Proposition 2.3.
Γ^* is a lattice, and it's given by $\Gamma^* = A^{-\mathsf{T}}\mathbb{Z}^n$ whenever A is a basis for Γ.

Proof. When an inverse exists we have that the inverse and transpose of a matrix commute, so there is no ambiguity in writing $A^{-\mathsf{T}}$.

We claim $\gamma^* \in \Gamma^*$ IFF $A^{\mathsf{T}}\gamma^* \in \mathbb{Z}^n$. The result then follows easily since $A^{\mathsf{T}}\gamma^* \in \mathbb{Z}^n$ IFF $\gamma^* \in A^{-\mathsf{T}}\mathbb{Z}^n$, whereby a basis of Γ^* is $A^{-\mathsf{T}}$. We proceed to prove the claim.

Suppose $\gamma^* \in \Gamma^*$. Then $\forall\gamma \in \Gamma\ \gamma^{\mathsf{T}}\gamma^* \in \mathbb{Z}$, which is equivalent by definition of elements in Γ to that $\alpha^{\mathsf{T}}A^{\mathsf{T}}\gamma^* \in \mathbb{Z}\ \forall\alpha \in \mathbb{Z}^n$. Making use of the Einstein summation convention: repeated indices implies a hidden sum, $\alpha^{\mathsf{T}}A^{\mathsf{T}}\gamma^* = \alpha_j A_{ij}\gamma_i^*$. From here we can *pick* $\alpha = a_I$, the canonical unit basis with 1 in the Ith position and 0 everywhere else. For each such $I = 1, 2, \ldots n$ we get $\alpha_j A_{ij}\gamma_i^* = A_{iI}\gamma_i^* \in \mathbb{Z}$. We can collect this in a vector to equivalently say $A_{ij}\gamma_i^* \in \mathbb{Z}^n$. But $A_{ij}\gamma_i^* = A^{\mathsf{T}}\gamma^*$ and we are done.

The other direction is simpler since we now know that we only need to show $\alpha^{\mathsf{T}}A^{\mathsf{T}}\gamma^* \in \mathbb{Z}\ \forall\alpha \in \mathbb{Z}^n$. Starting from $A^{\mathsf{T}}\gamma^* \in \mathbb{Z}^n$, we see immediately that the result of multiplication by $\alpha \in \mathbb{Z}^n$ from the left will result in an integer since $\mathbb{Z}$ is a ring. □

Therefore if we have the situation (2.1) of an orthogonal sum of lattices, its dual lattice is given as

$$(\Gamma_1 \overset{\perp}{+} \Gamma_2)^* = \begin{pmatrix} A_1 & 0 \\ 0 & A_2 \end{pmatrix}^{-\mathsf{T}} \mathbb{Z}^{n_1+n_2} = \begin{pmatrix} A_1^{-\mathsf{T}} & 0 \\ 0 & A_2^{-\mathsf{T}} \end{pmatrix} \mathbb{Z}^{n_1+n_2},$$

and thus we have

Proposition 2.4 (Orthogonal sums carry self-duality)**.**
If Γ_1, Γ_2 are self-dual, meaning $\Gamma_1 = \Gamma_1^*$ and $\Gamma_2 = \Gamma_2^*$, then so is $\Gamma_1 \overset{\perp}{+} \Gamma_2$.

Proof.

$$(\Gamma_1 \overset{\perp}{+} \Gamma_2)^* = \begin{pmatrix} A_1^{-\mathsf{T}} & 0 \\ 0 & A_2^{-\mathsf{T}} \end{pmatrix} \mathbb{Z}^{n_1+n_2} = \begin{pmatrix} A_1 & 0 \\ 0 & A_2 \end{pmatrix} \mathbb{Z}^{n_1+n_2} = \Gamma_1 \overset{\perp}{+} \Gamma_2.$$

□

Lastly we shall have use of the following proposition in Chapter 5 when discussing twelve dimensions.

Proposition 2.5.
The lattices Γ_1 and Γ_2 are congruent if and only if their duals Γ_1^* and Γ_2^* are congruent.

Proof. Take $C \in O_n(\mathbb{R})$, and let $\Gamma_1 = A_1\mathbb{Z}^n$ and $\Gamma_2 = A_2\mathbb{Z}^n$. Then $A_1 = CA_2$ implies

$$A_1^{-\mathsf{T}} = (A_1^{\mathsf{T}})^{-1} = (A_2^{\mathsf{T}}C^{-1})^{-1} = CA_2^{-\mathsf{T}}.$$

The reader can convince herself of the other direction. □

2.3 Tori

Now that we have a decent handle on what a lattice is we can turn our attention to the torus. Notice how we have neglected calling the torus flat. This is because this kind of torus is a special geometric torus whose surface is intrinsically "flat". We also call a cylinder "flat" in the same way. These remarks are made precise in Chapter 3. In short, the torus will not be called flat until we have a notion of measuring angles of vectors residing on its surface.

Fix a basis $A = (a_1 a_2 \dots a_n)$ of a lattice. We shall say **fundamental domain** to mean the closed set of representatives of each equivalence class that lie inside and on the left-down boundary of the "first" lattice cell

$$\left\{ \sum_{i=1}^{n} c_i a_i : c_i = 0 \text{ or } 1,\ i = 1, \dots, n \right\}$$

with respect to this basis. The fundamental domain of a lattice Γ shall be denoted by R_Γ. As an example the fundamental domain of $\mathbb{Z}^n$ is given by $[0, 1)^n$.

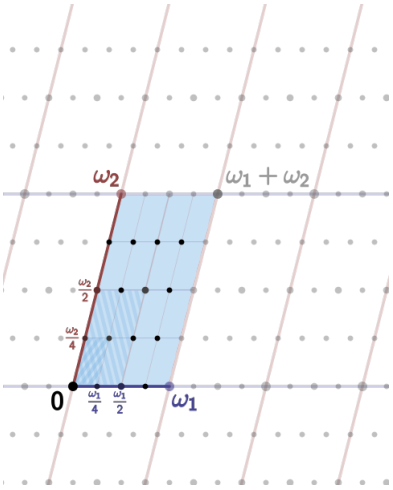

Figure 2.2: The fundamental domain of a lattice, courtesy of Wikipedia @https://en.wikipedia.org/wiki/Fundamental_domain.

Moreover we shall use **root representative** to mean one specific element in this fundamental domain.

Algebraically a lattice is an additive subgroup of $\mathbb{R}^n$. In fact it is a so called *discrete* subgroup since we can find an open neighbourhood around any point of it that contains no other points of the lattice. The idea that we want to keep in mind for realising the torus is that of "rolling up" a lattice to make its edges meet. Think of its fundamental domain (see Figure 2.2) and identify parallel edges to be identical so that it "wraps around" two ways. Figure 2.3 neatly illustrates the idea, note that the second folding stretches distances; trying this with a piece of a paper will not work.

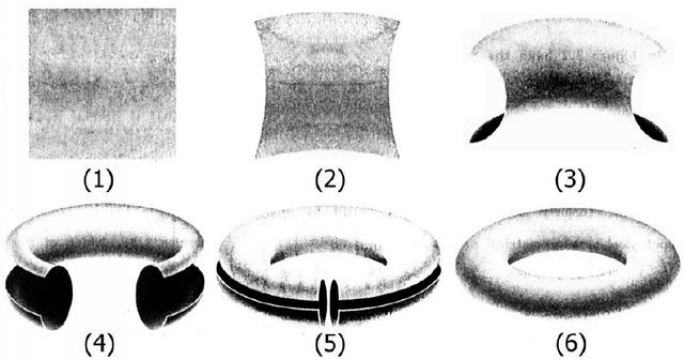

Figure 2.3: Rolling up of a fundamental domain, taken from [25].

The algebraic way to describe the operation of "rolling up" a lattice is predicated on the lattice Γ being a subgroup. Take $x, y \in \mathbb{R}^n$ and set $x \sim y$ if and only if x is found from y by a simple left translation of Γ, i.e. $x = \gamma + y$ for some $\gamma \in \Gamma$. With respect to this equivalence relation

$$\mathbb{R}^n \big/ \Gamma = \mathbb{R}^n \big/ \sim := \{[x] : x \in \mathbb{R}^n\},$$

where the equivalence class $[x] := \{y \sim x : y \in \mathbb{R}^n\}$. It is helpful to visualise this in two dimensions, elements in $[x]$ are equal to each other up to addition of a vector of the lattice. Thus in terms of sets we have accomplished what we set out to do; the lattice cell now wraps around just like we wanted. We shall call $\mathbb{R}^n \big/ \Gamma$ a torus.

In actual fact the torus is foremost a topological object, so we should to specify which sets are considered open in $\mathbb{R}^n \big/ \Gamma$. We nevertheless postpone this discussion to the next chapter since it isn't really required for the theory in the chapters following Chapter 3.

The **volume** of a torus $\mathbb{R}^n \big/ \Gamma$ is defined by

$$\det(\Gamma) = |\det(A)| = \sqrt{\det(A^{\mathsf{T}} A)}, \tag{2.2}$$

with A being any basis of $\mathbb{R}^n \big/ \Gamma$. This definition corresponds to calculating the volume of the fundamental domain in $\mathbb{R}^n$, which can be proven in the case of non-orthogonal bases by making use of Cavalieri's principle. Note moreover that the definition is invariant of the basis A used, since $\det(B) = \pm 1$ for $B \in GL_n(\mathbb{Z})$. As $\det(A^{-1}) = \frac{1}{\det(A)}$, we have that the determinant of the dual lattice is given by

$$\det(\Gamma^*) = \left| \frac{1}{\det(A)} \right| = \frac{1}{\det(\Gamma)}.$$

Let us motivate the upcoming theory. Consider again Figure 2.3. The *flat* torus, as we will soon see, does not have any stretched distances. How can that be if it is still the result of a rolling up of a lattice? The question of how exactly to perform the rolling up was unknown until Nash[18], who showed that it can actually be done *without* stretching distances. The resulting flat torus looks like the cover of this thesis.

A special type of flat torus which we will consider in Chapter 6 is the one whose lattice Γ has a diagonal basis matrix. These will be called **rectangular tori**.

To ponder what kind of object a flat torus is, and what it means for two flat tori to be equivalent, we need the contents of the next chapter. In short we will see that lattices characterise flat tori up to orthogonal transformations:

$$\text{“set of flat tori”} = \left(GL_n(\mathbb{R}) \Big/ GL_n(\mathbb{Z}) \right) \Big/ O_n(\mathbb{R}).$$

3

The flat torus as a Riemannian manifold

A flat torus is properly understood in the context of Riemannian geometry. In particular we need to define a geometric structure that is general enough to explain what is special about the inherent geometry of a flat torus. Without this we are unable to prove Theorem 3.2, which is central to the results discussed in Chapter 5 and Chapter 6. For a reminder of the differential geometry we make use of in this chapter, see Appendix A.

The space $\mathbb{R}^n$ with the natural topology induced by the metric $g(v,u) = u^\mathsf{T} v$ is a smooth manifold, in fact it is a smooth Lie group. The atlas consists of a single chart which covers all of $\mathbb{R}^n$. Given a lattice Γ, seen as a discrete subgroup of $\mathbb{R}^n$, we ask the question of whether a torus $\mathbb{R}^n/\Gamma$ also can be seen as a C^∞-manifold, and whether there is some way to transport the Euclidean metric down to the torus so that we get a Riemannian manifold. To give an answer, we consider here the general treatment of a Riemannian manifold 'quotiented' by a discrete group action.

3.1 The flat torus as a smooth quotient manifold

Let us first discuss the topology of the torus. It is given the so called quotient topology, wherein its open sets are defined so as to make the quotient map

$$\begin{aligned} \pi : \ \mathbb{R}^n &\to \mathbb{R}^n/\Gamma \\ x &\mapsto \pi(x) = [x]. \end{aligned}$$

continuous. Specifically, a subset $P \subset \mathbb{R}^n/\Gamma$ is called open *if and only if* $\pi^{-1}(P)$ is open in $\mathbb{R}^n$.

From the theory of smooth quotient manifolds, discussed in more detail in Appendix A.1, we have the following.

> **Theorem A.3** (Discrete quotient manifold theorem)**.**
> *Whenever G is a discrete group whose action on the C^∞-manifold M is free and proper, there is a unique smooth structure of M/G that together with the quotient topology makes it a C^∞-manifold. In more detail the structure is such that each point $p \in M/G$ is inside a connected neighbourhood $P \subset M/G$ whose projection preimage $\pi^{-1}(P) = \bigcup W_\alpha$, where the W_α are open and connected and*

> *when used to restrict the projection as* $\pi|_{W_\alpha}$ *they make it a diffeomorphism onto* P*.*

The fact that the chart transition maps are diffeomorphisms imply that they are, in particular, bijective and therefore the dimension of ${}^{M}\!/_{G}$ is the *same* as M. This is important. In fact, Theorem A.3 provides a way in which to construct many examples of n-dimensional manifolds.

We wish to apply this result to the torus, in that way turning it into a C^∞-manifold. It happens that any discrete subgroup G of a Lie group M (like the lattice) acts *freely* and *properly* by left translations.

Theorem A.4.
Let M *be a Lie group and* $G \subset M$ *a discrete subgroup. The left translation action* $M \ni x \mapsto \mathfrak{g}x \in M$ *by* $\mathfrak{g} \in G$ *is free and proper on* M*.*

Hence we can now safely establish that the torus given as ${}^{\mathbb{R}^n}\!/_{\Gamma}$, by some lattice Γ, is a well defined C^∞-manifold. Indeed, Γ is clearly a discrete subgroup of the Lie group $\mathbb{R}^n$; every two distinct points of Γ are a finite distance apart. Note that we do not call the torus *flat* as of yet, this will come later when we discuss metrics.

Let us investigate exactly how the manifold looks and operates. Let $x \in \mathbb{R}^n$. In each equivalence class $p = \pi(x)$ we can find the *root representative* $\varkappa_p \in p$ which is the unique element of p that lies in the fundamental domain R_Γ. With this root representative we can write any other element in the equivalence class p as $\Gamma + \varkappa_p$. It is true that also $\varkappa_p$ can be written this way, but uniquely as $0 + \varkappa_p$.

Let us recall the notion of charts and atlases of a manifold. We must around every point in our manifold be able to find an open neighbourhood and a corresponding invertible *chart map* which maps the neighbourhood into a subset of $\mathbb{R}^n$ so that this map and its inverse are both continuous. Now since we can cover $\mathbb{R}^n$ with a single chart equal to $(\mathbb{R}^n, id)$, we wonder if we can do the same on our torus. Unfortunately the answer is no, but the reason why is interesting enough to warrant a discussion.

The first guess is to take as our candidate the projection restricted to our fundamental domain

$$\pi|_{R_\Gamma} \colon R_\Gamma \to {}^{\mathbb{R}^n}\!/_{\Gamma}.$$

The chart map would then pick out the root representative of a point on the torus. A restriction really means that $\pi|_{R_\Gamma} = \pi \circ i$ where $i : R_\Gamma \hookrightarrow \mathbb{R}^n$ is the inclusion map. As such the space R_Γ is a topological space in its own right, its so called subspace topology being defined by sets S being open if and only S is the intersection of R_Γ with an open set in $\mathbb{R}^n$; $S = R_\Gamma \cap U$, U open in $\mathbb{R}^n$.

Like we just saw at the start of this section 3.1, the map π is continuous, therefore so is $\pi \circ i$. The composition is also bijective, in contrast to π, since a root representative is uniquely associated to a point on the torus.

As our chart map, consider therefore the inverse $h := (\pi|_{R_\Gamma})^{-1} = (\pi \circ i)^{-1}$. See Figure 3.1 for a picture of the situation. Thus h is bijective and h^{-1} is continuous by definition. The problem is that h itself is not continuous, so it is not an acceptable chart map.

To see why, note that we must find some open set $C \subset R_\Gamma$ such that its preimage with respect to h, namely $h^{-1}(C) = (\pi \circ i)(C)$, is not open in the topology of ${}^{\mathbb{R}^n}\!/_{\Gamma}$.

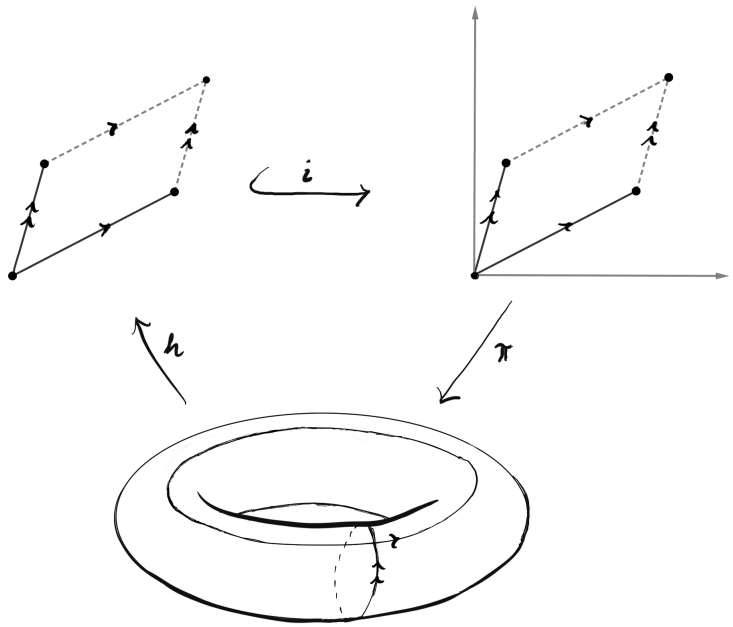

Figure 3.1: A supposed global chart map h, mapping the entire torus to a subset R_Γ of $\mathbb{R}^n$. The topological space R_Γ gets sent by i to $\mathbb{R}^2$ before being sent by π to the topological torus. Three different topologies are at play. The gluing is also illustrated, but it is important here to remember that R_Γ is only a topological space - not the torus itself!

By definition, a set B is open in the topology of $\mathbb{R}^n/\Gamma$ if and only if $\pi^{-1}(B)$ is open in $\mathbb{R}^n$. Thus it remains to see whether we can find an open set in R_Γ such that $\pi^{-1}((\pi \circ i)(C)) = i(C)$ is not an open set in $\mathbb{R}^n$.

The idea is to take a set which is inherently linked to the particular wrapping needed to create the torus from the fundamental domain. As such, let $C = R_\Gamma \cap B_\epsilon$, where B_ϵ is the open ball of very small radius $\epsilon > 0$ centered at the origin. See Figure 3.2. This is by definition clearly an open set in R_Γ. However, the inclusion $i(C) = C$ is not open in $\mathbb{R}^n$ since it contains a 2ϵ-part of ∂R_Γ. Thus h is not continuous.

We may however construct an atlas by taking our set C as one chart, while adding two other charts which we get from making cuts along parallel lines inside R_Γ. See Figure 3.3. Note that this means that unlike $\mathbb{R}^n$, the torus is a *closed* manifold, since every cover of the torus has this finite subcover and there is no boundary to speak of from the local perspective (i.e. that of an ant) on the torus.

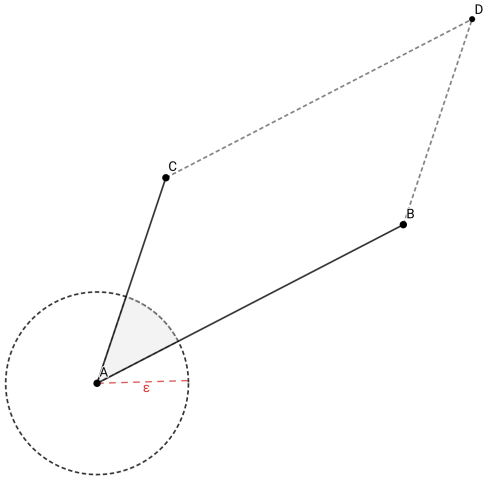

Figure 3.2: The set $R_\Gamma \cap B_\epsilon$ is open in the subset topology of R_Γ but not in the standard topology of $\mathbb{R}^n$.

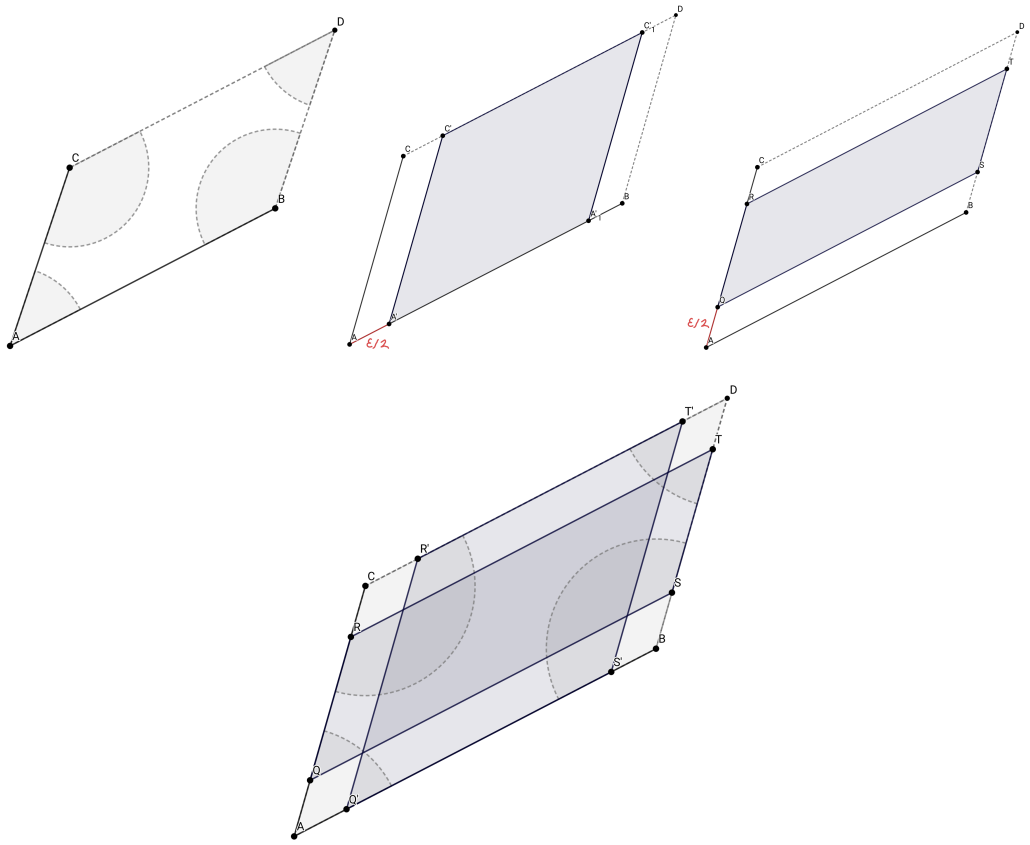

Figure 3.3: Three charts which together make up an atlas of the topological torus.

3.2 Inheritance of the Euclidean metric

While now in possession of a smooth structure, we have yet to construct a geometrical one. The goal of this chapter is to prove that the torus $\mathbb{R}^n/\Gamma$ is a *Riemannian* manifold, that it has a geometrical structure in the form of a Riemannian metric. Let us first recall some definitions, we refer to Appendix A.2 if they make no sense.

A **Riemannian metric** g on a C^∞-manifold is a (0,2)-tensor field satisfying for all vector fields $X, Y \in \Gamma(TM)$

(i) $g(X,Y) = g(Y,X)$,
(ii) $Y \mapsto g(X,Y)$ is a C^∞-isomorphism,
(iii) $g(X,X) > 0$ for all $X \in \Gamma(TM) \setminus \{0\}$.

The second condition is a non-degeneracy condition which guarantees the existence of the musical isomorphisms $\flat : X \mapsto X_\flat := g(X, \bullet)$ and $\sharp : \omega \mapsto \omega^\sharp \in \Gamma(TM)$ s.t. $g(\omega^\sharp, Y) = \langle \omega, Y \rangle$, where the 1-form $\omega \in \Gamma(TM^*)$.

A C^∞-manifold M equipped with a Riemannian metric g is called a **Riemannian manifold**, which we denote by (M, g).

A *local* diffeomorphism φ from and to Riemannian manifolds $(M, g) \to (N, g')$ is called a **local isometry** if the metric gets pulled back by φ, i.e. $g = \varphi^* g'$. If a manifold is in local isometry with Euclidean space then we say that this manifold is **flat**. One can show that this definition of flatness is equivalent to the Riemann curvature tensor vanishing.

> **Lemma A.5.**
> *If $\varphi : M \to N$ is a smooth covering map from and to smooth manifolds, then $\varphi_{*,x}$ is an isomorphism for every $x \in M$.*

Our map $\pi : \mathbb{R}^n \to \mathbb{R}^n/\Gamma$ is such a smooth covering. By the lemma we thus have $\pi_{*,x}$ isomorphic for every $x \in \mathbb{R}^n$. This is key - the metric on $\mathbb{R}^n$ descends to $\mathbb{R}^n/\Gamma$ since we can now set for every $p \in \mathbb{R}^n/\Gamma$,

$$\widehat{g}_p(X,Y) := g_x((\pi_{*,x})^{-1}X, (\pi_{*,x})^{-1}Y),$$

where $X, Y \in T_p\mathbb{R}^n/\Gamma$ and $x \in \pi^{-1}(p)$. But the expression on the right is precisely how we define the pullback, setting $u := (\pi_{*,x})^{-1}X, v := (\pi_{*,x})^{-1}Y$ we see that

$$g_x(u,v) = \widehat{g}_p(\pi_{*,x}u, \pi_{*,x}v) = (\pi^*\widehat{g})_x(u,v)$$

implying that $g_x = (\pi^*\widehat{g})_x$ for every $x \in \mathbb{R}^n$. Consequently $g = \pi^*\widehat{g}$ as $(0,2)$-tensor fields. In other words, the very definition of the metric $\widehat{g}$ ensures that it is flat.

However, we are not sure that this is well defined since there could be two points x, y say in overlapping neighbourhoods $U \ni x \in \underbrace{U \cap V}_{\neq \emptyset} \ni y \in V$ both with $\pi(x) = p = \pi(y)$. This would in turn possibly give us trouble in defining $g_{\pi^{-1}(p)}$ since $(\pi_{*,\pi^{-1}(p)})^{-1}$ could mean both $(\pi_{*,x})^{-1}$ and $(\pi_{*,y})^{-1}$.

If the reader is satisfied by simply reading that we do not need to worry and that $\widehat{g}$ is in fact well defined, then she can stop here and move on to the next section on

the analysis of when two tori are isometric. Otherwise we must turn our attention to some more preliminaries.

By (A.9) we see that the Euclidean metric tensor g in $\mathbb{R}^n$ can be written

$$g = (\omega_i dx^i) \otimes (\omega'_j dx^j) = \omega_i \omega'_j dx^i \otimes dx^j,$$

and since

$$g_{ij} = g(\frac{\partial}{\partial x^i}, \frac{\partial}{\partial x^j}) = \omega_k \omega'_l (dx^k \otimes dx^l)(\frac{\partial}{\partial x^i}, \frac{\partial}{\partial x^j}) = \omega_k \omega'_l \langle dx^k, \frac{\partial}{\partial x^i} \rangle \langle dx^l, \frac{\partial}{\partial x^j} \rangle = \omega_i \omega'_j$$

this implies that $g = g_{ij} dx^i \otimes dx^j$. But recall that the Euclidean metric tensor is just the identity $g_{ij} = \delta_{ij}$ and therefore we arrive at

$$g = \sum_{i=1}^{n} dx^i \otimes dx^i,$$

which will be of use to use to us shortly.

Lemma 3.1.
The pullback commutes with tensor products and the differential. Therefore the Euclidean metric is invariant under pullbacks. If $\varphi : M \to N$ is a smooth map from and to smooth manifolds then

(i) $\varphi^*(F \otimes G) = \varphi^* F \otimes \varphi^* G$,
(ii) $\varphi^*(dy^i) = d(\varphi^* y^i)$, *for* $y \in V \subset N$ *with chart map* $y : V \to \mathbb{R}^n$.
(iii) $l^* g = g$, *where* l *is the translation by some* $c \in \mathbb{R}^n$.

Proof. We follow our nose.

$$\begin{aligned}(\varphi^*(F \otimes G))_x(X_1, \ldots, X_{s+q}) &= (F \otimes G)_{\varphi(x)}(\varphi_{*,x} X_1, \ldots, \varphi_{*,x} X_{s+q}) = \\ &= F_{\varphi(x)}(\varphi_{*,x} X_1, \ldots, \varphi_{*,x} X_s) G_{\varphi(x)}(\varphi_{*,x} X_{s+1}, \ldots, \varphi_{*,x} X_{s+q}) = \\ &= (\varphi^* F)_x(X_1, \ldots, X_s)(\varphi^* G)_x(X_{s+1}, \ldots, X_{s+q}) = \\ &= ((\varphi^* F)_x \otimes (\varphi^* G)_x)(X_1, \ldots, X_{s+q}),\end{aligned}$$

and we have shown (i).

Showing (ii) is again a matter of checking definitions. Note that while $y^i : V \to \mathbb{R}$ we have $\varphi^* y^i = y^i \circ \varphi : \varphi^{-1}(N) \to \mathbb{R}$, which is a coordinate function of some chart map of M. Thus for some $x \in \pi^{-1}(V)$, take $X \in T_x M$. It holds that

$$\langle d(\varphi^* x^i)_x, X \rangle = \langle d(x^i \circ \varphi)_x, X \rangle = X(x^i \circ \varphi).$$

On the other hand we have

$$\langle (\varphi^* dx^i)_x, X \rangle = \langle dx^i_{\varphi(x)}, \varphi_{*,x} X \rangle = \varphi_{*,x} X(x^i) = X(x^i \circ \varphi),$$

whereby we receive (ii).

We now apply (i) and (ii) to show (iii).

$$\begin{aligned} l^*g &= l^* \sum_{i=1}^{n} dx^i \otimes dx^i = \sum_{i=1}^{n} l^*dx^i \otimes l^*dx^i = \\ &= \sum_{i=1}^{n} d(x^i \circ l) \otimes d(x^i \circ l) \overset{def.\ of\ l}{=} \sum_{i=1}^{n} d(x^i + c^i) \otimes d(x^i + c^i) = \\ &= \sum_{i=1}^{n} dx^i \otimes dx^i = g. \end{aligned}$$

□

Take distinct $x, x' \in \mathbb{R}^n$ and suppose $\pi(x) = \pi(x') = p \in {}^{\mathbb{R}^n}\!/_{\Gamma}$. That means they are in the same equivalence class by left translation of Γ, i.e. $x' = \gamma + x$ for $\gamma \in \Gamma$. Let us denote this map by $l : \mathbb{R}^n \ni x \mapsto \gamma + x \in \mathbb{R}^n$ so that $l(x) = x'$. By its definition π is thus agnostic to l in the sense of $\pi = \pi \circ l$, and therefore we get

$$\pi_{*,x} = \pi_{l(x)_*} \circ l_{*,x} = \pi_{x'_*} \circ l_{*,x} \tag{3.1}$$

for every $x \in \mathbb{R}^n$. Let us now show that $\widehat{g}_{\pi(x')}(X, Y) = \widehat{g}_{\pi(x)}(X, Y)$ for $X, Y \in T_p {}^{\mathbb{R}^n}\!/_{\Gamma}$.

$$\begin{aligned} \widehat{g}_{\pi(x')}(X, Y) &\overset{l\circ l^{-1}=id}{=} g_{l(x)}(l_{*,x} \circ (l_{*,x})^{-1} \circ (\pi_{x'_*})^{-1} X, l_{*,x} \circ (l_{*,x})^{-1} \circ (\pi_{x'_*})^{-1} Y) = \\ &= g_{l(x)}(l_{*,x} \circ (\pi_{x'_*} \circ l_{*,x})^{-1} X, l_{*,x} \circ (\pi_{x'_*} \circ l_{*,x})^{-1} Y) \overset{(3.1)}{=} \\ &= g_{l(x)}(l_{*,x} \circ (\pi_{*,x})^{-1} X, l_{*,x} \circ (\pi_{*,x})^{-1} Y) \overset{(A.10)}{=} \\ &= (l^*g)_x((\pi_{*,x})^{-1} X, (\pi_{*,x})^{-1} Y) \overset{Lemma 3.1}{=} \\ &= g_x((\pi_{*,x})^{-1} X, (\pi_{*,x})^{-1} Y) = \widehat{g}_{\pi(x)}(X, Y). \end{aligned}$$

We can as such rest assured that the metric descends from $(\mathbb{R}^n, g)$ down to the *flat* torus

$$T^n_\Gamma := \left({}^{\mathbb{R}^n}\!/_{\Gamma}, \widehat{g} \right)$$

in a well defined way so as to make the resulting metric flat.

3.3 Isometry of flat tori

Two Riemannian manifolds $(M, g), (M', g')$ are said to be **isometric** if there exists a (global) diffeomorphism $\varphi : M \to M'$ such that $g = \varphi^* g'$. With (A.10) we can write the statement $g = \varphi^* g'$ more precisely as

$$g_x(X, Y) = (\varphi^* g')_x(X, Y) = g'_{\varphi(x)}(\varphi_{*,x} X, \varphi_{*,x} Y),$$

for $X, Y \in T_x M$ and any $x \in M$.

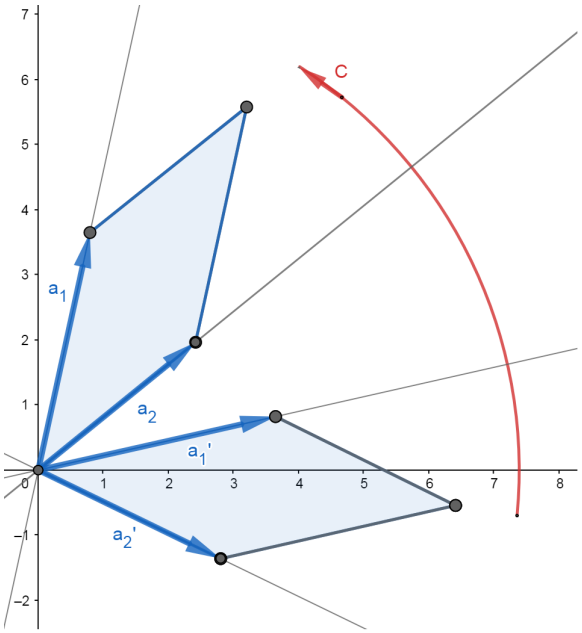

Figure 3.4: The idea of Theorem 3.2.

Theorem 3.2 (Flat tori are equal up to congruence of their lattices)**.**
Two flat tori T^n_Γ *and* $T^n_{\Gamma'}$ *are isometric if and only if* Γ' *is congruent to* Γ*.*

Proof. For this proof we shall denote points in T^n_Γ by $[x]$ and points in $T^n_{\Gamma'}$ by $[x]'$. Let us start by assuming the lattices are congruent, that is $\Gamma' = C\Gamma$ for some $C \in O_n(\mathbb{R})$. Take $x \in \mathbb{R}^n$, the only reasonable map to consider is C itself,

$$C : [x] = \{y : y = \gamma + x, \gamma \in \Gamma\} \mapsto [x]' = C[x] = \{y : y = \gamma + Cx, \gamma \in C\Gamma\}$$

which is invertible. Any invertible linear map between finite-dimensional vector spaces is moreover always a diffeomorphism.

We are left to show that $\widehat{g} = \psi^* \widehat{g'}$. To this end let us take $[x] \in T^n_\Gamma$ and vectors X, Y of $T_{[x]}T^n_\Gamma$. Then we are looking to compare

$$\widehat{g}_{[x]}(X, Y) = g_x((\pi_{*,x})^{-1}X, (\pi_{*,x})^{-1}Y)$$

with

$$\begin{aligned}(\psi^*\widehat{g'})_{[x]}(X, Y) &= \widehat{g'}_{[x]'}(\psi_{*,[x]}X, \psi_{*,[x]}Y) = \\ &= g_x(((\pi'_{*,x})^{-1} \circ \psi_{*,[x]})X, ((\pi'_{*,x})^{-1} \circ \psi_{*,[x]})Y).\end{aligned}$$

But recall the proof of Lemma A.5; we have since ψ is a diffeomorphism that the

pushforward $\psi_{*,[x]}$ is an isomorphism. Therefore the following diagram commutes

$$\begin{array}{ccc} T_x\mathbb{R}^n & & \\ {\scriptstyle \pi_{*,x}}\downarrow & \searrow^{\pi'_{*,x}} & \\ T_{[x]}T^n_\Gamma & \xrightarrow{\psi_{*,[x]}} & T_{[x]'}T^n_{C\Gamma} \end{array}$$

and so $(\pi'_{*,x})^{-1} \circ \psi_{*,[x]} = (\pi_{*,x})^{-1}$.

Now we wish to show the other direction, suppose that the two tori $T^n_\Gamma, T^n_{\Gamma'}$ are isometric. This means that ψ is a diffeomorphism and $\widehat{g} = \psi^* \widehat{g'}$. Intuitively we can say that the map preserves the geometry in the sense of distances and angles, we need to lift this idea from the tori to the Euclidean space. First note that for the charts (U, ϕ) and (U', ϕ'), $\phi' \circ \psi \circ \phi^{-1} : \mathbb{R}^n \to \mathbb{R}^n$ is necessarily an isomorphism, and therefore it is an invertible *linear* map that we denote by C. That $\widehat{g} = \psi^* \widehat{g'}$ means

$$g_x((\pi_{*,x})^{-1}X, (\pi_{*,x})^{-1}Y) = g_x(((\pi'_{*,x})^{-1} \circ \psi_{*,[x]})X, ((\pi'_{*,x})^{-1} \circ \psi_{*,[x]})Y),$$

for all $x \in \mathbb{R}^n$ and $X, Y \in T_{[x]}T^n_\Gamma$. Therefore we must have $\psi_{*,[x]} = \pi'_{*,x} \circ (\pi_{*,x})^{-1}$ and this means that $\psi_{*,[x]}$ is an isomorphism.

There is a natural identification between points (or vectors) of $\mathbb{R}^n$ and vectors of its tangent space $T_0\mathbb{R}^n$. Thus for two vectors $v', w' \in R_{\Gamma'} \subset \mathbb{R}^n$ we have $v' \overset{id}{=} (\pi'_{*,0})^{-1}X', w' \overset{id}{=} (\pi'_{*,0})^{-1}Y'$ for some $X', Y' \in T_{[0]'}T^n_{\Gamma'}$. Since C is an invertible map we also have $v' = Cv, w' = Cw$ for some vectors $v, w \in R_\Gamma$ which in turn are identified as $v \overset{id}{=} (\pi_{*,0})^{-1}X, w \overset{id}{=} (\pi_{*,0})^{-1}Y$ for $X, Y \in T_{[0]}T^n_\Gamma$. Consequently we have the following commutative diagram

$$\begin{array}{ccc} T_{[0]}T^n_\Gamma & \xrightarrow{\psi_{*,[0]}} & T_{[0]'}T^n_{\Gamma'} \\ {\scriptstyle (\pi_{*,0})^{-1}}\downarrow & & \downarrow{\scriptstyle (\pi'_{*,0})^{-1}} \\ T_0\mathbb{R}^n \overset{id}{=} \mathbb{R}^n & \xrightarrow{C} & \mathbb{R}^n \overset{id}{=} T_0\mathbb{R}^n \end{array}$$

which implies that $C = (\pi'_{*,0})^{-1} \circ \psi_{*,[0]} \circ \pi_{*,0}$. We can therefore see that $X' = \psi_{*,[0]}X$ and $Y' = \psi_{*,[0]}Y$. Indeed for instance

$$(\pi'_{*,0})^{-1}X' = v' = Cv = C(\pi_{*,0})^{-1}X = (\pi'_{*,0})^{-1} \circ \psi_{*,[0]}X.$$

Hence by isometry of the tori,

$$\begin{aligned} v^\mathsf{T} C^\mathsf{T} C w = (v')^\mathsf{T} w' = g_0(v', w') = g_0((\pi'_{*,0})^{-1}X', (\pi'_{*,0})^{-1}Y') = \\ = g_0((\pi_{*,0})^{-1}X, (\pi_{*,0})^{-1}Y) = v^\mathsf{T} w, \end{aligned}$$

implying that $C^\mathsf{T} C$ is just the identity. We are done. □

As Riemannian manifolds then, flat tori are different up to congruence of their lattices. By virtue of this being an 'if and only if' it gives us the characterisation

we are looking for. A flat torus is defined by its lattice up to congruence and so[1],

$$\text{“set of flat tori”} = \left(GL_n(\mathbb{R})\Big/GL_n(\mathbb{Z})\right)\Big/O_n(\mathbb{R}).$$

In response to this we can define a notion of basis matrix for the torus by extending the notion of basis for a lattice. A matrix A' is a **basis for the flat torus** T^n_Γ if it can be written $A' = CA$ for any $C \in O_n(\mathbb{R})$, where A is a basis for the lattice Γ.

To finish this section we recall Proposition 2.5 which says that two lattices are congruent if and only if their respective dual lattices are. Immediately this gives the following corollary to Theorem 3.2.

Corollary 3.3.
Two flat tori T^n_Γ and $T^n_{\Gamma'}$ are isometric if and only if $(\Gamma')^*$ is congruent to Γ^*.

3.4 The Laplace operator on a Riemannian manifold

It is appropriate at this point to define the **Laplace-Beltrami operator** (also called **Laplacian**) of a function on a Riemannian manifold. This section serves simply as a reminder, the precise construction of the Laplacian is given in Appendix A.3. Having both (A.11) and (A.13) in mind, the Laplacian is given as

$$\begin{aligned}\Delta := \operatorname{div}\circ\operatorname{grad} : C^\infty(M) &\to C^\infty(M)\\ f &\longmapsto \Delta f = \operatorname{div}(\operatorname{grad} f).\end{aligned}$$

Locally in a chart,

$$\Delta f = \frac{1}{\sqrt{|g|}}\frac{\partial}{\partial x^i}(\sqrt{|g|}(\operatorname{grad} f)^i) = \frac{1}{\sqrt{|g|}}\frac{\partial}{\partial x^i}(\sqrt{|g|}g^{ik}\frac{\partial f}{\partial x^k}).$$

Additionally, the following properties hold given any smooth functions f, g and $a \in \mathbb{R}$:

(i) $\Delta(fg) = \Delta f g + f\Delta g + 2g(\operatorname{grad}(f), \operatorname{grad}(g))$,
(ii) $\Delta(af + g) = a\Delta f + \Delta g$.

At this stage we are ready to start to consider eigenvalue equations on Riemannian manifolds. It might be sightly anti-climactic at this point to hear that we shall restrict this discussion to the case of flat tori immediately, but recall that we never promised to do anything more. The reason for this restriction is rooted in the complexity of the general theory; in order for the text to be accessible we would need to develop this stuff over several additional pages while also leaving out the proofs of certain fundamental results.

[1]Here there exist different notational conventions, where different authors take the quotient from the left if the map characterising the difference lands on the left. We make no such distinction; taking always the quotient on the right.

4

The eigenvalue equation on a flat torus

The Helmholtz equation describing the vibration modes of a clamped, elastic membrane takes the form

$$-\Delta A = k^2 A, \text{ where } k \text{ is the wave number and } A \text{ is the amplitude.}$$

In one dimension it describes a vibrating string with fixed end points. In two dimensions we may consider a circular domain whose boundary is similarly fixed. In polar coordinates the solutions received after a separation of variables takes the form of products of

$$\sin(n\theta),\ \cos(n\theta) \text{ and } J_n(k_{m,n}r).$$

The $J_n(k_{m,n}r)$ are Bessel functions. These solutions are the modes of vibration of a circular drumhead. Is it possible using these vibration modes to hear how big the drumhead is? More generally, given *any* shape of drumhead and corresponding vibration modes, can we hear its shape? Is the problem even well-defined?

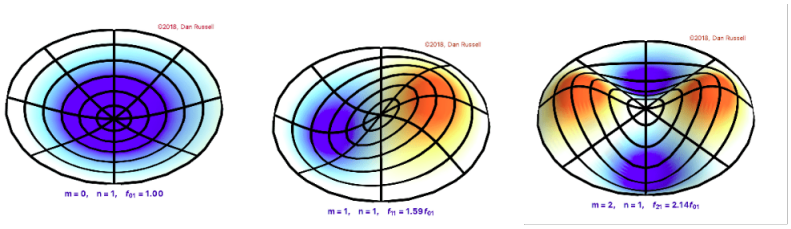

Figure 4.1: Some eigenmodes of a disk-shaped domain, taken from @https://www.acs.psu.edu/drussell/Demos/MembraneCircle/Circle.html.

It is clear that the problem we wish to construct is one involving functions which are periodic in a way that is generalised from periodic functions on $\mathbb{R}$. The natural extension of periodicity for functions in $\mathbb{R}$ is to consider functions f with the property $f(x+z) = f(x)$ for all $x \in \mathbb{R}^n$ and $z \in \mathbb{Z}^n$. More generally, we might as well consider $f(x+\gamma) = f(x)$ for all γ in some lattice $\Gamma \subset \mathbb{R}^n$. This is fascinating because, supposing these f are also smooth, then these functions are precisely the functions on $\mathbb{R}^n$ which correspond to smooth functions $\widehat{f}$ on the torus $T^n_{\mathbb{Z}^n}$. In other words we should examine functions on the flat torus T^n_Γ if we wish to extend the discussion of vibration modes and their impact on shapes of drums to multiple dimensions.

4.1 Recasting to Euclidean space

On a Riemannian manifold (M, g) we consider the

Eigenvalue problem

Find all $\lambda \in \mathbb{R}$ for which there exists some nonzero function $f \in C^\infty(M)$ such that

$$-\Delta f = \lambda f \tag{4.1}$$

The minus sign is chosen by convention. The eigenvalues λ correspond to the wavenumbers of different modes of vibration of the membrane.

Thus for the flat torus $M = T^n_\Gamma$ we want to find real eigenvalues λ and nonzero smooth functions $\widehat{f}$ satisfying $-\Delta\widehat{f} = \lambda\widehat{f}$ on $\mathbb{R}^n/\Gamma$. Can we to any function $\widehat{f}$ on the torus get a unique representative function f on $\mathbb{R}^n$, so as to flip the problem (4.1) to $\mathbb{R}^n$? Indeed we can, by pulling $\widehat{f}$ back through the natural projection. Consider the function $f \in C^\infty(\mathbb{R}^n)$ defined by

$$f := \pi^*\widehat{f} = \widehat{f} \circ \pi : \mathbb{R}^n \to \mathbb{R}, \tag{4.2}$$

where $\widehat{f} \in C^\infty(T^n_\Gamma)$ is any function on the torus and $\pi : \mathbb{R}^n \to T^n_\Gamma$ the natural projection considered in Chapter 3.1. The function f is uniquely associated to $\widehat{f}$ due to π being unique. Additionally f has the special property of being Γ-periodic in the following sense; $f(x+\gamma) = \widehat{f}(\pi(x)) = f(x)$ for all $\gamma \in \Gamma$, and we write $f(x+\Gamma) = f(x)$.

As a representative domain consider $\overline{R_\Gamma}$, the closure in $\mathbb{R}^n$ of the fundamental domain, and set for every $f = \widehat{f} \circ \pi$ the restriction $\overline{f} := f|_{\overline{R_\Gamma}} = f \circ i$, where $i : \overline{R_\Gamma} \hookrightarrow \mathbb{R}^n$ is the inclusion map. The inclusion map for a set is unique, so $\overline{f}$ is the function on $\overline{R_\Gamma}$ uniquely associated to $\widehat{f}$.

Thus for every function $\widehat{f} \in C^\infty(T^n_\Gamma)$ there is an associated unique function[1]

$$\begin{aligned} f \in C^\infty_\Gamma\left(\overline{R_\Gamma}\right) := \{ & f \in C^\infty\left(\overline{R_\Gamma}\right) : f(x) = f(x+\gamma) \\ & \text{for all } \gamma \in \Gamma \text{ such that } x+\gamma \in \overline{R_\Gamma}, \\ & \text{and } f \text{ remains smooth when} \\ & \text{extended periodically to } \mathbb{R}^n\}. \end{aligned}$$

Hence it is equivalent to consider the

[1] We have written simply f in place of $\check{f} = f|_{\overline{R_\Gamma}}$, and will continue to do so for notational convenience.

Eigenvalue problem for the torus in Euclidean space

Find all $\lambda \in \mathbb{R}$ for which there exists some nonzero function $f \in C^\infty_\Gamma\left(\overline{R_\Gamma}\right)$ such that

$$\begin{cases} -\Delta f = \lambda f \\ f(x) = f(x+\gamma) \quad \text{for all } x \in \partial R_\Gamma, \gamma \in \Gamma \text{ such that } x+\gamma \in \overline{R_\Gamma} \end{cases} \tag{4.3}$$

The equivalence of these two perspectives, between the flat torus and its pullback representation in $\mathbb{R}^n$ (i.e. its fundamental domain R_Γ), allows us to define any kind of *function space* we like on the flat torus by simply transferring from R_Γ what we already know in Euclidean space. We already discussed smooth functions, that $C^\infty(T^n_\Gamma) \cong C^\infty_\Gamma\left(\overline{R_\Gamma}\right)$, and for sets of integrable functions the case is even easier due to the following definition of **integral** of a function f on the torus;

$$\int_{T^n_\Gamma} f := \int_{R_\Gamma} f(x)\, dx.$$

Therefore $L^1(T^n_\Gamma)$ is identified directly with $L^1(R_\Gamma)$, and the same is true that any $L^p(T^n_\Gamma) \cong L^p(R_\Gamma)$, $p \in [1, \infty)$. In addition, theorems like Lebesgue's dominated convergence are inherited easily. Thus we shall henceforth perform *all* analysis in the fundamental domain and transfer deduced results onto its corresponding flat torus.

4.2 Well-posedness on the fundamental domain

To see that (4.3) is a well defined problem, let us recast it to a variational form. Multiply by $g \in C^\infty_\Gamma\left(\overline{R_\Gamma}\right)$ on both sides and integrate over the domain. Applying the divergence theorem we get

$$\int_{R_\Gamma} \nabla f(x) \cdot \nabla g(x)\, dx = \int_{\partial R_\Gamma} \nabla f \cdot n g\, dS + \lambda \int_{R_\Gamma} f(x) g(x)\, dx.$$

We can make a change of variables in the surface integral to transform the domain to $R_{\mathbb{Z}^n} = [0,1]^n$. Recall the volume $\mathrm{Vol}(T^n_\Gamma)$ defined by (2.2) in Chapter 2. It is given by

$$\mathrm{Vol}(T^n_\Gamma) := \det(\Gamma) = |\det(A)|,$$

with A being any basis of T^n_Γ. Hence,

$$\begin{aligned} \int_{\partial R_\Gamma} \nabla f \cdot n g\, dS &= \mathrm{Vol}(T^n_\Gamma) \int_{\partial [0,1]^n} \frac{\partial f}{\partial x_i} n_i g\, dS = \\ &= \mathrm{Vol}(T^n_\Gamma) \sum_{i=1}^n \int_{\partial [0,1]^n \setminus [0,1]_i} \frac{\partial f}{\partial x_i} g - \frac{\partial f}{\partial x_i} g\, dS = 0, \end{aligned}$$

since for any given $n-1$ dimensional side i we have $n_i = (0, 0, \ldots, 0, \underbrace{\pm 1}_{\#i}, 0, \ldots, 0)$ while f and g are *periodic*.

This last step is essential to our analysis and is deserving of a remark. Usually the boundary part is killed off by imposing Dirichlet or Neumann conditions on the boundary of (4.3). As such one usually speaks, with regards to well-posedness of eigenvalue problems, of 'Dirichlet-' and 'Neumann-eigenvalues'. Yet as a result of the very specific *Lipschitz*[2] fundamental domain associated to a flat torus, we are able to do much the same with periodic boundary conditions.

Thus, we seek $f \in H^1(R_\Gamma) := \{u \in L^2(R_\Gamma) : \nabla u \in L^2(R_\Gamma)\}$ such that

$$\int_{R_\Gamma} \nabla f \cdot \nabla g \, dx = \lambda \int_{R_\Gamma} f g \, dx \tag{4.4}$$

for all $g \in H^1(R_\Gamma)$. The Sobolev space $H^1(R_\Gamma)$ is needed to make the integral on the left-hand side well defined; its inner product is given by

$$\langle f, g \rangle_{H^1(R_\Gamma)} := \int_{R_\Gamma} \nabla f \cdot \nabla g \, dx + \int_{R_\Gamma} f g \, dx.$$

Thus, by Hölder's inequality we consequently have

$$\int_{R_\Gamma} \nabla f \cdot \nabla g \, dx \leq \|\nabla f\|_{L^2(R_\Gamma)} \|\nabla g\|_{L^2(R_\Gamma)} < \infty,$$

which would not be true if $f, g \in L^2(R_\Gamma)$. In $H^1(R_\Gamma)$ the problems (4.4) and (4.3) are equivalent in a distributional sense, i.e. in their respective integral representations for all $g \in H^1(R_\Gamma)$, by virtue of the divergence theorem.

In this weak form (4.4) we can show that there exists solutions. We denote by

$$\mathrm{Spec}(T_\Gamma^n) := \{\lambda_k\} = \{\lambda_1, \lambda_2, \dots\}$$

the **spectrum** of the problem (4.3) defined by the values $\lambda \in \mathbb{R}$ for which there are nontrivial solutions $f \in H^1(R_\Gamma)$ to (4.4), called eigenfunctions. For each eigenvalue $\lambda_k \in \mathrm{Spec}(T_\Gamma^n)$ there is a set of eigenfunctions associated to λ_k called the **eigenspace** of λ_k, denoted by

$$\mathrm{Ker}(\Delta + \lambda_k I) := \{f \in H^1(R_\Gamma) : (4.4) \text{ holds for } \lambda = \lambda_k\},$$

where $I : H^1(R_\Gamma) \to H^1(R_\Gamma)$ is the identity operator. The dimension of $\mathrm{Ker}(\Delta + \lambda_k I)$ is always finite (by Theorem B.1) and denoted by m_k, the multiplicity of λ_k.

Let us take account of some very specific properties owing to (4.4); these will fulfil the requirements for the invocation of Theorem B.1. Taking $V = H^1(R_\Gamma)$ and $H = L^2(R_\Gamma)$ we note that (4.4) can be written as

$$a(f, g) = \lambda \langle f, g \rangle_H,$$

for the symmetric bilinear form $a(f, g) := \int_{R_\Gamma} \nabla f \cdot \nabla g \, dx$ in V. Such a form is continuous if $a(f, g) \leq c \|f\|_V \|g\|_V$ for some $c \in \mathbb{R}$ and all $f, g \in V$, which is clearly satisfied by our form for $c = 1$ through Hölder's inequality. By weakly coercive we mean that the expression

$$a(g, g) + \lambda_0 \|g\|_H^2 \geq \alpha \|g\|_V^2$$

[2] A domain whose boundary can be thought of as the graph of a Lipschitz function.

is satisfied for some $\alpha > 0$ and some $\lambda_0 \in \mathbb{R}$. This property holds as well, with equality for $\alpha = \lambda_0 = 1$. However we may do even better; picking $\alpha = \lambda_0 > 0$ close to 0 we see that $a(g,g) + \lambda_0 \|g\|_H^2 = \|\nabla g\|_H^2 + \lambda_0 \|g\|_H^2 \geq \lambda_0 \|g\|_V^2$, whence we may pick $\lambda_0 > 0$ as small as we like.

Furthermore, the sets are in continuously dense embeddings with each other as

$$V \hookrightarrow H \hookrightarrow V^* \text{ and } \overline{V}^{\|\bullet\|_H} = H.$$

We call such a collection $\{V, H, V^*\}$ a **Hilbert triplet**. To be continuously embedded simply means for $\{f_k\} \subset V$ and $f \in V$ that $f_k \overset{\|\bullet\|_V}{\to} f$ in V implies $f_k \overset{\|\bullet\|_H}{\to} f$ in H. Not only is $V \hookrightarrow H$, but due to Rellich's theorem, we have a compact embedding $V \hookrightarrow^c H$ meaning that any sequence $\{u_k\}$ bounded in V has a subsequence converging in the norm of H to an element of V.

All of this spent effort is worth its price, we satisfy

Lemma B.1 (Spectral theorem for bilinear forms)**.**
Consider a Hilbert triplet $\{V, H, V^*\}$ with H separable and V compactly embedded into H. Given a symmetric, continuous and weakly coercive bilinear form $a(\bullet, \bullet)$ we have

(i) The spectrum $\sigma(a) \subset (-\lambda_0, \infty)$ is infinite, yet it can be ordered in a nondecreasing sequence $\{\lambda_k\}$ where each eigenvalue appears a number of times equal to its finite multiplicity. Also $\lambda_k \to \infty$.

(ii) H has an orthonormal basis of eigenfunctions $\{f_k\} \subset V$,

$$a(f_k, f_l) = \lambda_k \langle f_k, f_l \rangle_H = 0 \text{ for } \lambda_k \neq \lambda_l.$$

Here $\sigma(a) = \text{Spec}(T_\Gamma^n)$. Explanations from where this result derives is given in Appendix B, inspired by [19]. For similar results in the Riemannian framework, see for instance [14].

The existence theorem Theorem B.1 is important. Without it we would not be fully justified in searching for solutions to (4.4), since there might not have been any to find. Now we may safely pass to investigating the spectrum and its eigenspaces.

4.3 Revealing the spectrum

Let us try to deduce how the eigenfunctions and corresponding eigenvalues must look on a general flat torus T_Γ^n, where the lattice $\Gamma \subset \mathbb{R}^n$. The periodicity at the boundary is key; $f(x) = f(x + \gamma)$ for all x on the boundary and $\gamma \in \Gamma$ such that their sum $x + \gamma$ is also on the boundary. We can show for the 1-dimensional lattice $b\mathbb{Z} = \text{Span}_{\mathbb{Z}}\{b\}$ with $b \in \mathbb{R}$, that any element of

$$\{e^{2\pi i x/bn}\}_{n \in \mathbb{Z}}$$

solves $-\frac{d^2}{dx^2} f = \lambda f$ on $\mathbb{R}/b\mathbb{Z}$ with $\lambda = 4\pi^2 \left(\frac{n}{b}\right)^2$. These functions are b-periodic and we will by the end of this section be convinced that they form an L^2-orthogonal basis of functions on $\mathbb{R}/b\mathbb{Z}$.

Suppose for $y \in \Gamma^*$ that $f(x) = g(y^\intercal x)$ for some 1-periodic $g : \mathbb{R} \to \mathbb{R}$. This is nice because for every $\gamma \in \Gamma$ it holds that $y^\intercal \gamma = z$ for some $z \in \mathbb{Z}$, and hence

$$\begin{aligned} f(x+\gamma) = g(y^\intercal x + y^\intercal \gamma) = g(y^\intercal x + z) = g(y^\intercal x + z - 1 + 1) = \\ = g(y^\intercal x + z - 1) = \cdots = g(y^\intercal x) = f(x). \end{aligned}$$

Taking g to be 1-periodic is simply another way of saying that g is a function on $\mathbb{R}/\mathbb{Z}$, and that it for constants $c_n \in \mathbb{R}$ therefore takes the (heuristic) form

$$g(y^\intercal x) = \sum_n c_n e^{2\pi i y^\intercal x n} = \sum_n c_n e^{2\pi i (ny)^\intercal x} = \sum_{y \in \Gamma^*} c_y e^{2\pi i y^\intercal x} = f(x).$$

Indeed, we claim that any element of

$$\{e^{2\pi i y^\intercal x}\}_{y \in \Gamma^*}$$

solves $-\Delta f = \lambda f$ on T^n_Γ with $\lambda = 4\pi^2 y^\intercal y = 4\pi^2 \|y\|^2$. Notice that this also covers the eigenvalue $\lambda = 0$ in the sense that it is achieved by $y = 0$, and hence we may set its corresponding eigenfunction as $e^{2\pi i 0} = 1$. Furthermore, the functions in $\{e^{2\pi i y^\intercal x}\}$ are *smooth*, Γ-periodic and they will form an L^2-orthogonal basis of functions on T^n_Γ, with orthonormality achieved by the set

$$\left\{ \frac{1}{\sqrt{\mathrm{Vol}(T^n_\Gamma)}} e^{2\pi i y^\intercal x} \right\}_{y \in \Gamma^*}.$$

We remark that $e^{2\pi i y^\intercal x} \in C^\infty_\Gamma\left(\overline{R_\Gamma}\right)$ implies that such a function solves the original problem (4.3) in the *classical* sense. In other words, once we have weak solutions we have strong solutions.

Let us start by seeing that $e^{2\pi i y^\intercal x}$ solves (4.3) for $y \in \Gamma^*$. For any $j \in \{1, 2, \ldots, n\}$,

$$-\frac{\partial^2}{\partial x_j^2} e^{2\pi i y^\intercal x} = -\frac{\partial^2}{\partial x_j^2} e^{2\pi i y_i x_i} = 4\pi^2 y_j^2 e^{2\pi i y^\intercal x}$$

and so $-\Delta e^{2\pi i y^\intercal x} = 4\pi^2 \|y\|^2 e^{2\pi i y^\intercal x}$ as promised. Orthogonality of $\{e^{2\pi i y^\intercal x}\}$ in $L^2(T^n_\Gamma)$ is more tricky and we must spend some time to investigate the situation on $L^2(R_\Gamma)$.

The analysis is done through a consecutive simplification procedure, to the point where we have eventually reduced the problem to 1 dimension. In this spirit let us recall that R_Γ is always an n-dimensional parallelepiped and that linear maps (i.e. Jacobians of smooth maps) transform such parallelepipeds to other parallelepipeds. Therefore let A be a basis of Γ and note for $y \in \Gamma^*$ that

$$\begin{aligned} \int_{T^n_\Gamma} e^{2\pi i y^\intercal \bullet} = \int_{R_\Gamma} e^{2\pi i y^\intercal x} dx = \int_{R_\Gamma} e^{2\pi i (A^{-\intercal} z)^\intercal x} dx = \int_{R_\Gamma} e^{2\pi i z^\intercal A^{-1} x} dx = \\ = \mathrm{Vol}(T^n_\Gamma) \int_{R_{\mathbb{Z}^n}} e^{2\pi i z^\intercal x'} dx' = \mathrm{Vol}(T^n_\Gamma) \int_{T^n_{\mathbb{Z}^n}} e^{2\pi i z^\intercal \bullet}. \end{aligned} \tag{4.5}$$

Thus it becomes an straight forward exercise to show that $\left\{\frac{e^{2\pi i y^{\mathsf{T}} x}}{\sqrt{\mathrm{Vol}(T^n_\Gamma)}}\right\}_{y\in\Gamma^*}$ is an orthonormal basis for T^n_Γ if and only if $\{e^{2\pi i z^{\mathsf{T}} x}\}_{z\in\mathbb{Z}^n}$ is an orthonormal basis for $T^n_{\mathbb{Z}^n}$.

Mini-appendix: distributions

Before proving the following theorem let us recall what we mean when describing a limit being true 'in the sense of distributions'. Let Ω be any bounded, open set in $\mathbb{R}^n$. On Ω the set of smooth functions with compact support are denoted by $C_0^\infty(\Omega)$. There is an appropriate notion of convergence which we may endow $C_0^\infty(\Omega)$ with; namely for $\varphi_k, \varphi \in C_0^\infty(\Omega)$, we write '$\varphi_k \to \varphi$ in $C_0^\infty(\Omega)$' if there is a compact set in Ω containing the support of every φ_k while the convergence of any derivative[a] $D^\alpha\varphi_k \to D^\alpha\varphi$ is uniform in Ω. With this (very strong) convergence we write $\mathcal{D}(\Omega)$ for $C^\infty(\Omega)$, and call this set the set of test functions. A **distribution** is defined as a linear functional $L : \mathcal{D}(\Omega) \to \mathbb{R}$ which is continuous in the following sense:

$$\langle L, \varphi_k\rangle \to \langle L, \varphi\rangle \text{ whenever } \varphi_k \to \varphi \text{ in } \mathcal{D}(\Omega).$$

One such distribution is the Dirac delta δ, defined by

$$\langle \delta, \varphi\rangle = \varphi(0).$$

The set of distributions, denoted $\mathcal{D}'(\Omega)$, is a linear space and we can add to it a notion of 'weak' convergence. We say that L_k converges to L 'in the sense of distributions', or 'weakly', if

$$\langle L_k, \varphi\rangle \to \langle L, \varphi\rangle \text{ for all } \varphi \in \mathcal{D}(\Omega).$$

Lastly, for $p \in [1, \infty]$, we have the continuous embeddings $L^p(\Omega) \hookrightarrow \mathcal{D}'(\Omega)$; meaning that if $u_k \to u$ in $L^p(\Omega)$ then $u_k \to u$ in $\mathcal{D}'(\Omega)$.

[a] Here, $\alpha = (\alpha_1, \ldots, \alpha_n)$ is a multi-index with $|\alpha| \geq 0$.

Theorem 4.1 (Fourier basis on the torus)**.**
The functions in $\{e^{2\pi i x^{\mathsf{T}}\gamma}\}_{\gamma\in\Gamma^*}$ form an L^2-orthonormal basis of the flat torus $T^n_{\mathbb{Z}^n}$.

Proof. Let us show then by (4.5) that the set $\{e^{2\pi i z^{\mathsf{T}} x}\}_{z\in\mathbb{Z}^n}$ forms an orthonormal system on the torus quotiented by the lattice $\mathbb{Z}^n$. Recall that an orthonormal basis is a *complete* orthonormal system. Take the L^2 inner product of $e^{2\pi i x^{\mathsf{T}} z}$

and $e^{2\pi i x^{\mathsf{T}} z'}$ for $z, z' \in \mathbb{Z}^n$,

$$\begin{aligned}\int_{[0,1]^n} e^{2\pi i x^{\mathsf{T}} z}\overline{e^{2\pi i x^{\mathsf{T}} z'}}dx &= \int_{[0,1]^n} e^{2\pi i x^{\mathsf{T}}(z-z')}dx = \int_{[0,1]^n} e^{2\pi i x^{\mathsf{T}}(\sum_k (\alpha_k-\alpha'_k)e_k)}dx = \\ &= \int_{[0,1]^n} e^{2\pi i(\sum_k (\alpha_k-\alpha'_k)x_k)}dx = \\ &= \int_{[0,1]^n\setminus[0,1]_l} e^{2\pi i(\sum_{k\neq l} (\alpha_k-\alpha'_k)x_k)}dx' \int_0^1 e^{2\pi i(\alpha_l-\alpha'_l)x_l}dx_l = \\ &= \frac{1}{2\pi i(\alpha_l-\alpha'_l)} \int_{[0,1]^n\setminus[0,1]_l} e^{2\pi i(\sum_{k\neq l} (\alpha_k-\alpha'_k)x_k)}dx' \underbrace{(e^{2\pi i(\alpha_l-\alpha'_l)}-1)}_{=0} = \\ &= 0\end{aligned}$$

by the fact that $\alpha_l - \alpha'_l \in \mathbb{Z}$. That the functions are of L^2 length 1 is easily seen by a similar integration.

To show the system is complete is more complicated. We need to show that the L^2-closure $\overline{\mathrm{Span}_{z\in\mathbb{Z}^n}(\{e^{2\pi i z^{\mathsf{T}} x}\})}^{L^2} = L^2([0,1]^n)$, or equivalently that the orthogonal complement to $\mathrm{Span}_{z\in\mathbb{Z}^n}(\{e^{2\pi i z^{\mathsf{T}} x}\})$ is composed of only the zero. This means that there is no nonzero $f \in L^2([0,1]^n)$ orthogonal in the L^2-sense to the system;

$$\langle f, e^{2\pi i z^{\mathsf{T}} x}\rangle_{L^2([0,1]^n)} = 0 \quad \forall z \in \mathbb{Z}^n \implies f \equiv 0.$$

We reduce to the one-dimensional case by the following result.

Lemma 4.2.
If $\{u_{m_j}\}_{m_j\in\mathbb{Z}}$ is an orthogonal basis in $L^2(0,1)$, then $\{\prod_{j=1}^n u_{m_j}\}_{m_1,\ldots,m_n\in\mathbb{Z}}$ is an orthogonal basis in $L^2([0,1]^n) = L^2(0,1)\times\ldots\times L^2(0,1)$.

Proof. We show only completeness of the orthogonal system since that is all we need. Also, we only concern ourselves with dimension 2, as the rest follow by recurrence.

Let $F(y) = \int_0^1 f(x,y)u_{m_1}(x)dx$, where $f \in L^2([0,1]^2)$. Then for all $m_1, m_2 \in \mathbb{Z}$,

$$\begin{aligned}0 &= \langle f, u_{m_1}u_{m_2}\rangle_{L^2(0,1)\times L^2(0,1)} = \\ &= \int_0^1\int_0^1 f(x,y)u_{m_1}(x)u_{m_2}(y)dxdy = \int_0^1 F(y)u_{m_2}(y)dy \\ &\implies F(y) = 0, \text{ by completeness of } \{u_{m_2}\}.\end{aligned}$$

But $F(y) = 0 \implies f(x,y) = 0$, by completeness of $\{u_{m_1}\}$. □

Hence, what we need to prove is that $\{e^{2\pi i m x}\}_{m\in\mathbb{Z}}$ is complete in $L^2(0,1)$. To carry out this last step we use the fact that $C_0^\infty(0,1)$ is dense in $L^2(0,1)$ to make the further restriction of considering $f \in C_0^\infty(0,1)$. The idea is to combine the facts that the Dirac delta δ acts as the identity in convolution with that it can be approximated (in the sense of distributions) by linear combinations of

$\{e^{2\pi imx}\}_{m\in\mathbb{Z}}$. In order to get an appropriate notion of convolution we must consider the odd extension of f,

$$\overline{f(x)} = \begin{cases} f(x), & x \in (0,1) \\ -f(-x), & x \in (-1,0) \end{cases}$$

Clearly $f(x) = 0 \iff \overline{f(x)} = 0$, and it is straight forward by

$$\int_{-1}^{1} \overline{f(x)} e^{2\pi imx} dx = 2 \int_{0}^{1} f(x) e^{2\pi imx} dx$$

to see that

$$\int_{0}^{1} f(x) e^{2\pi imx} dx = 0 \iff \int_{-1}^{1} \overline{f(x)} e^{2\pi imx} dx = 0.$$

We may then set up the convolution,

$$(f * g)(x) = \int_{-1}^{1} f(x-y) g(y) dy.$$

Consider now the function

$$h_k(x) = K_k \left(\frac{1 + \cos(\pi x)}{2} \right)^k,$$

where K_k is a constant such that $\int_{-1}^{1} h_k(x) dx = 1$. We have that $h_k(-1) = h_k(1) = 0$ and $h_k(0) = K_k$. Furthermore by the binomial theorem $h_k(x)$ is a linear combination of functions in $\{e^{2\pi imx}\}_{m\in\mathbb{Z}}$.

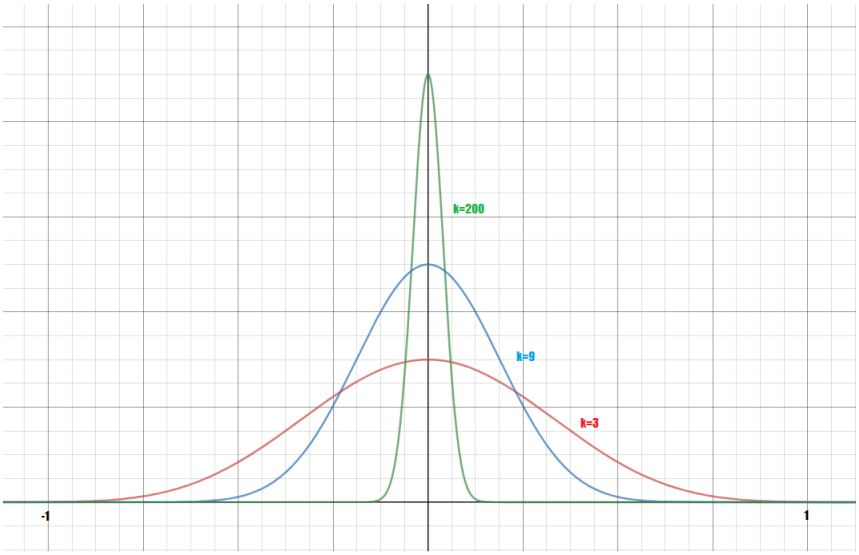

Figure 4.2: The function h_k for some values of k.

Now, as k increases the support of h_k shrinks to $x = 0$ and therefore the value of K_k must increase in tandem - to keep the area under the graph equal to 1. In fact it holds that $h_k(x) \to \delta$ in the sense of distributions. As $\overline{f}$ is in $C_0^\infty(0,1)$ they may act as test functions for δ. Hence we finally receive the sought after result by first assuming $\int_0^1 f(x)e^{2\pi imx}dx = 0$ for all $m \in \mathbb{Z}$;

$$0 = \overline{f(x)} * h_k = \int_{-1}^{1} \overline{f(x-y)}h_k(y)dy \to \overline{f(x)} * \delta = \overline{f(x)}$$

hence $f(x) = 0$ and $\{e^{2\pi imx}\}_{m\in\mathbb{Z}}$ is complete. □

We are not done before we have shown that *any* eigenfunction of (4.4) must be written as a superposition of eigenfunctions in $\{e^{2\pi iy^\intercal x}\}_{y\in\Gamma^*}$. Luckily, this is precisely what the completeness of this set grants. Let us write $\langle \bullet, \bullet \rangle_2$ for the inner product in $L^2(R_\Gamma)$. Now suppose $f \in H^1(R_\Gamma) \subset L^2(R_\Gamma)$ solves (4.3) in the weak sense. Then, by completeness, we may write

$$f(x) = \frac{1}{\sqrt{\mathrm{Vol}(T_\Gamma^n)}} \sum_{y\in\Gamma^*} \langle f, e^{2\pi iy^\intercal x}\rangle_2 e^{2\pi iy^\intercal x} \text{ in } L^2(R_\Gamma).$$

Moreover, the series $\sum\langle f, e^{2\pi iy^\intercal x}\rangle_2 e^{2\pi iy^\intercal x}$ converges uniformly since $e^{2\pi iy^\intercal x}$ is smooth. As a consequence we may differentiate term-wise due to Fubini's theorem on differentiation, so that

$$-\Delta f = \lambda f \implies \sum_{y\in\Gamma^*} \langle f, e^{2\pi iy^\intercal x}\rangle_2 (-\Delta) e^{2\pi iy^\intercal x} = \sum_{y\in\Gamma^*} \langle f, e^{2\pi iy^\intercal x}\rangle_2 \lambda e^{2\pi iy^\intercal x}, \tag{4.6}$$

in $L^2(R_\Gamma)$. However, by now we know for a fact that $-\Delta e^{2\pi iy^\intercal x} = 4\pi^2 \|y\|^2 e^{2\pi iy^\intercal x}$. Consequently, by uniqueness of the Fourier coefficients of the function $\lambda f \in L^2(R_\Gamma)$, the coefficients on the right and left of (4.6) all have to match up. As y changes for every term while λ is constant, there can be only one nonzero Fourier coefficient $\langle f, e^{2\pi iy^\intercal x}\rangle_2$ such that the corresponding eigenvalue $4\pi^2 \|y\|^2$ on the left in turn equals λ on the right; there is no other possibility. Hence for some $y \in \Gamma^*$,

$$f(x) = \langle f, e^{2\pi iy^\intercal x}\rangle_2 e^{2\pi iy^\intercal x}.$$

In other words, f must be in the span of the eigenfunctions $\{e^{2\pi iy^\intercal x}\}$ and thus there is *no* eigenfunction outside said span existing on the torus.

We may conclude that a generic flat torus T_Γ^n has the following exhaustive spectrum and eigenspaces

$$\begin{aligned}
\mathrm{Spec}(T_\Gamma^n) &= \{4\pi^2 \|y\|^2 : y \in \Gamma^*\}, \\
\mathrm{Ker}(\Delta + 0) &= \mathrm{Span}_{\mathbb{R}}\{1\}, \\
\mathrm{Ker}(\Delta + \lambda_k) &= \mathrm{Ker}(\Delta + 4\pi^2 \|y\|^2) = \mathrm{Span}_{\mathbb{R}}\{\sin(2\pi x^\intercal y), \cos(2\pi x^\intercal y)\}, \\
&\qquad \text{for some } y \in \Gamma^* \setminus \{0\}.
\end{aligned}$$

4.4 Fourier series and Poisson summation

The periodicity of functions on the flat torus T^n_Γ also implies that flat tori constitute a natural setting for an extension of Fourier analysis to multiple dimensions. As usual we shall not distinguish between $\widehat{f}$ and f. We also keep the notation $\langle \bullet, \bullet \rangle_2$ for the inner product in $L^2(R_\Gamma)$.

We seek to prove the Poisson summation formula in the general case where the summation is done over a lattice $\Gamma \subset \mathbb{R}^n$ and its dual Γ^*. In a certain form we shall discuss, it has a profound impact on characterising isospectrality, which will be of great use to us in both Chapter 5 and Chapter 6. Here the formula takes the shape

$$\sum_{\gamma \in \Gamma} f(\gamma) = \frac{1}{\mathrm{Vol}(T^n_\Gamma)} \sum_{y \in \Gamma^*} \hat{f}(y),$$

where $f \in L^1(\mathbb{R}^n)$. For any function $f \in L^1(\mathbb{R}^n)$ we have its **Fourier transform** defined by the Lebesgue integral

$$\hat{f}(y) = \int_{\mathbb{R}^n} f(x) e^{-2\pi i x^\intercal y} dx.$$

Recall Theorem 4.1 and consider Bessel's inequality whose proof is left as an exercise:

$$\frac{1}{\mathrm{Vol}(T^n_\Gamma)} \sum_{y \in \Gamma^*} \langle f, e^{2\pi i y^\intercal x} \rangle_2 \leq \|f\|_2^2 .$$

Using these results one can show that any function $f \in L^2(R_\Gamma)$ can be modified on a set of Lebesgue measure 0 to be continuous and equal $\sum_{y \in \Gamma^*} c_y e^{2\pi i y^\intercal x}$, where $c_y = \frac{1}{\mathrm{Vol}(T^n_\Gamma)} \langle f, e^{2\pi i y^\intercal x} \rangle_2$. Thus for every $x \in R_\Gamma$,

$$f \in L^2(R_\Gamma) \implies f(x) = \frac{1}{\mathrm{Vol}(T^n_\Gamma)} \sum_{y \in \Gamma^*} \langle f, e^{2\pi i y^\intercal x} \rangle_2 e^{2\pi i y^\intercal x}.$$

As a last remark on Theorem 4.1, note that there was nothing in the proof of completeness that required $f \in L^2([0,1]^n)$ specifically. In fact since $C_0^\infty([0,1]^n)$ is dense in any $L^p([0,1]^n)$, $p \in [1, \infty)$, we have in particular by the same proof that

$$f \in L^1(R_\Gamma) \implies f(x) = \frac{1}{\mathrm{Vol}(T^n_\Gamma)} \sum_{y \in \Gamma^*} \langle f, e^{2\pi i y^\intercal x} \rangle_2 e^{2\pi i y^\intercal x} \quad \text{in } L^1(R_\Gamma). \tag{4.7}$$

This means that $\left\{ \frac{1}{\mathrm{Vol}(T^n_\Gamma)} e^{2\pi i \gamma^\intercal x} \right\}_{\gamma \in \Gamma}$ is dense in $L^1(R_\Gamma)$.

A question we didn't ask ourselves until now is how to get a function on the torus T^n_Γ if we start with a function f defined on $\mathbb{R}^n$. There are basically two ways. The first is to consider the formal sum whose convergence we shall not worry about yet

$$\sum_{\gamma \in \Gamma} f(x + \gamma).$$

This function is periodic since $x \mapsto x + \gamma'$ would simply permute the order of Γ in the sum. The other way is to write

$$\sum_{\gamma \in \Gamma^*} \hat{f}(\gamma) e^{2\pi i x^{\intercal} \gamma}.$$

What Poisson summation tells us, is that the two approaches are essentially the same.

Theorem 4.3 (Poisson summation formula)**.**
Take $f \in L^1(\mathbb{R}^n)$. Then for $x \in R_\Gamma$ the series

$$\sum_{\gamma \in \Gamma} f(x + \gamma)$$

converges (absolutely) in the $L^1(R_\Gamma)$-norm. The resulting function in $L^1(R_\Gamma)$ has the series expansion

$$\frac{1}{Vol(T_\Gamma^n)} \sum_{y \in \Gamma^*} \hat{f}(y) e^{2\pi i x^{\intercal} y}.$$

Proof. Convergence is easily checked once one appreciates that $\mathbb{R}^n$ is the disjoint union $\mathring{\bigcup}_{\gamma \in \Gamma} R_\Gamma - \gamma$ of fundamental domain translates. Indeed the series converges to a function in $L^1(R_\Gamma)$,

$$\begin{aligned} \int_{R_\Gamma} |\sum_{\gamma \in \Gamma} f(x+\gamma)| dx \leq \sum_{\gamma \in \Gamma} \int_{R_\Gamma} |f(x+\gamma)| dx = \sum_{\gamma \in \Gamma} \int_{R_\Gamma - \gamma} |f(x)| dx = \\ = \int_{\mathbb{R}^n} |f(x)| dx < \infty. \end{aligned}$$

Now recall the discussion of (4.7). It implies by density that $\sum_{\gamma \in \Gamma} f(x+\gamma) \in L^1(R_\Gamma)$ can be written for $c_y = \frac{1}{\mathrm{Vol}(T_\Gamma^n)} \langle \sum_{\gamma \in \Gamma} f(x+\gamma), e^{2\pi i x^{\intercal} y} \rangle_2$ as

$$\sum_{\gamma \in \Gamma} f(x+\gamma) = \sum_{y \in \Gamma^*} c_y e^{2\pi i x^{\intercal} y} \quad \text{in } L^1(R_\Gamma).$$

Again, since $\sum_{\gamma \in \Gamma} f(x+\gamma)$ lives in $L^1(R_\Gamma)$ we may invoke Fubini's theorem and compute for all $y \in \Gamma^*$,

$$\begin{aligned} c_y &= \frac{1}{\mathrm{Vol}(T_\Gamma^n)} \int_{R_\Gamma} \Big(\sum_{\gamma' \in \Gamma} f(x+\gamma') \Big) e^{-2\pi i x^{\intercal} y} dx = \\ &= \frac{1}{\mathrm{Vol}(T_\Gamma^n)} \sum_{\gamma' \in \Gamma} \int_{R_\Gamma - \gamma'} f(x+\gamma') e^{-2\pi i x^{\intercal} y} dx = \\ &= \frac{1}{\mathrm{Vol}(T_\Gamma^n)} \int_{\mathbb{R}^n} f(x) e^{-2\pi i x^{\intercal} y} dx = \frac{1}{\mathrm{Vol}(T_\Gamma^n)} \hat{f}(y). \end{aligned}$$

Hence for every $x \in \mathbb{R}^n$

$$\sum_{\gamma\in\Gamma} f(x+\gamma) = \frac{1}{\mathrm{Vol}(T^n_\Gamma)} \sum_{y\in\Gamma^*} \hat{f}(y) e^{2\pi i x^{\mathrm{T}} y}. \tag{4.8}$$

□

Picking $x = 0$ in (4.8) we get the sought formula

$$\sum_{\gamma\in\Gamma} f(\gamma) = \frac{1}{\mathrm{Vol}(T^n_\Gamma)} \sum_{y\in\Gamma^*} \hat{f}(y).$$

A choice of $f = e^{-k\|\bullet\|^2}$ with $k > 0$ yields

$$\sum_{\gamma\in\Gamma} e^{-k\|\gamma\|^2} = \frac{1}{\mathrm{Vol}(T^n_\Gamma)} \sum_{y\in\Gamma^*} \left(\frac{\pi}{k}\right)^{n/2} e^{-\frac{\pi^2\|y\|^2}{k}}$$

after a classical calculation of $\hat{f}$. The function is smooth and decays very rapidly at infinity, so it most definitely is in $L^1(\mathbb{R}^n)$. The exponent $-k\|\gamma\|^2$ on the left-hand side is familiar to us if γ is in Γ^*. Exchanging Γ by its dual Γ^* gives

$$\sum_{y\in\Gamma^*} e^{-k\|y\|^2} = \mathrm{Vol}(T^n_\Gamma) \sum_{\gamma\in\Gamma} \left(\frac{\pi}{k}\right)^{n/2} e^{-\frac{\pi^2\|\gamma\|^2}{k}}.$$

Letting now $k = 4\pi^2 t$ for $t \in (0,\infty)$ finally yields

$$\sum_{y\in\Gamma^*} e^{-4\pi^2\|y\|^2 t} = \frac{\mathrm{Vol}(T^n_\Gamma)}{(4\pi t)^{n/2}} \sum_{\gamma\in\Gamma} e^{-\frac{\|\gamma\|^2}{4t}}, \tag{4.9}$$

where the left-hand side is called the **partition function** of the flat torus T^n_Γ.

The partition function in general sums those exponentials whose exponents are the Laplace-eigenvalues of the manifold. Its name derives from the partition function of statistical mechanics, where it relates microscopic- to macroscopic quantities of a thermodynamical system[1]. We know from Theorem 4.3 that the series on both sides of the equality converge.

4.5 Spectral implications of Poisson summation

For the partition function we can show

$$\lim_{t\to 0} \sum_{y\in\Gamma^*} e^{-4\pi^2\|y\|^2 t} = \infty, \text{ and } \lim_{t\to\infty} \sum_{y\in\Gamma^*} e^{-4\pi^2\|y\|^2 t} = 1.$$

Making the substitution $w = e^{-4\pi^2 t} \in (0,1)$ in (4.9) gives us the so-called **theta function**, or **theta series**, of the lattice Γ^*,

$$\theta_{\Gamma^*}(w) = \sum_{y\in\Gamma^*} w^{\|y\|^2}. \tag{4.10}$$

Since we can quotient $\mathbb{R}^n$ by any lattice Γ we like, the theta function of a lattice always converges.

With this in hand let us proceed to prove the following result

Theorem 4.4 (Torus spectrum contained within theta series)**.**
The theta series θ_{Γ^*} of the dual lattice to a torus T^n_Γ determines its eigenvalues and their multiplicities.

Proof. Let us make the substitution $w = e^{-4\pi^2 t}$ to work with the partition function $P(t) = \sum_{y\in\Gamma^*} e^{-4\pi^2\|y\|^2 t}$ instead of the theta function, since this makes our proof easier. Everything which we will show for $P(t)$ also holds for the theta-series by virtue of this substitution.

Enumerating the spectrum $\mathrm{Spec}(T^n_\Gamma) = \{4\pi^2 \|y\|^2 : y \in \Gamma^*\}$ as

$$\{0, 4\pi^2 \|y_1\|^2, 4\pi^2 \|y_2\|^2, \dots\}$$

with $\|y_i\| < \|y_{i+1}\|$ for $i = 0, 1, \dots$, we can write the partition function as

$$P(t) = 1 + \sum_{i=1}^{\infty} m_i e^{-4\pi^2\|y_i\|^2 t},$$

where m_i is the multiplicity of the ith eigenvalue. Then for $r \in \mathbb{R}$ consider

$$e^{rt}(P(t) - 1) = \sum_{i=1}^{\infty} m_i e^{t(r-4\pi^2\|y_i\|^2)}.$$

Since $\|y_1\|$ is less than every other length, if $r < 4\pi^2 \|y_1\|^2$ then r is less than any eigenvalue and so in this case every exponent would be negative. Thus we have

$$\lim_{t\to\infty} e^{rt}(P(t) - 1) = \begin{cases} 0, & r < 4\pi^2 \|y_1\|^2 \\ \infty, & r > 4\pi^2 \|y_1\|^2 \end{cases}.$$

If on the other hand $r = 4\pi^2 \|y_1\|^2$ we can see that the first summand will have exponent equal to 0 while the rest will be negative, so that $\lim_{t\to\infty} e^{rt}(P(t)-1) = m_1$. Note that this happens only when r is exactly $4\pi^2 \|y_1\|^2$. Thus if we define $4\pi^2 \|y_1\|^2$ to be the unique value $r \in \mathbb{R}$ so that $\lim_{t\to\infty} e^{rt}(P(t) - 1) = m_1$, we will get $4\pi^2 \|y_1\|^2$ to be the correct first eigenvalue of the torus.

Since we now have the first eigenvalue as $4\pi^2 \|y_1\|^2$, we can proceed by the same argument to find the second $4\pi^2 \|y_2\|^2$ by analysing

$$\lim_{t\to\infty} e^{r't}(P(t) - 1 - m_1 e^{-4\pi^2\|y_1\|^2}),$$

with varying values of $r' \in \mathbb{R}$. We continue in this way, incrementally, to receive the kth eigenvalue by analysis of

$$\lim_{t\to\infty} e^{rt}\left(P(t) - 1 - \sum_{i=1}^{k-1} m_i e^{-4\pi^2\|y_i\|^2}\right),$$

for $r \in \mathbb{R}$. □

Immediately we have the corollary

Corollary 4.5 (Characterising isospectrality #1)**.**
Two flat tori T^n_Γ and $T^n_{\Gamma'}$ are isospectral if and only if their dual lattices have the same theta series;

$$\theta_{\Gamma^*}(w) = \theta_{\Gamma'^*}(w).$$

Proof. Isospectrality gives $\theta_{\Gamma^*}(w) = \theta_{\Gamma'^*}(w)$. The other direction follows from Theorem 4.4. □

An important consequence to Corollary 4.5 is the spectral invariance of the volume $\mathrm{Vol}(T^n_\Gamma)$. It remains unchanged between tori having the same spectrum since such tori have equal theta series, and so in (4.9) we may take the limit as $t \to 0^+$, concluding that they have the same volume.

Corollary 4.6.
Two isospectral flat tori have the same volume.

We may glean additional knowledge about the spectrum from the right-hand side of (4.9). The behaviour of

$$\frac{\mathrm{Vol}(T^n_\Gamma)}{(4\pi t)^{n/2}} \sum_{\gamma\in\Gamma} e^{-\frac{\|\gamma\|^2}{4t}}$$

in (4.9) as $t \to 0+$ uniquely determines the values in $\{\|\gamma\| : \gamma \in \Gamma\}$ in an analogous manner to the proof of Theorem 4.4. Thus we have

Corollary 4.7 (Characterising isospectrality #2)**.**
Two flat tori T^n_Γ and $T^n_{\Gamma'}$ are isospectral if and only if their lattices have the same length spectra, i.e.

$$\{\|\gamma\| : \gamma \in \Gamma\} = \{\|\gamma'\| : \gamma' \in \Gamma'\}.$$

5

Counterexamples in dimensions 16, 12 and 4

Historically, since Milnor[17], the search for non-spectrometric pairs of flat tori became a race down to the lowest possible dimension, essentially due to Proposition 5.2. This proposition which we prove in the next section gives non-spectrometric pairs in any dimension above some dimension where they have already been found. The lowest dimension exhibiting these counterexamples was incrementally lowered over the course of around forty years, from 16 in 1964, to 12 by Kneser[13] in 1967, to 8 by Kitaoka [12] in 1977, and eventually down to 4 by Schiemann[20] in 1990.

5.1 Working with theta series in high dimensions

We know by Corollary 4.5 that two flat tori are isospectral if and only if the theta functions of their corresponding dual lattices are the same. This fact motivates the analysis in the following. In this section we follow [8], simply giving more details. We shall give the 16- and 12-dimensional counterexamples provided by Milnor and Kneser respectively.

Let us first consider some lattices which we use to create non-spectrometric tori in higher dimensions. Let

$$D_n := \left\{ \delta \in \mathbb{Z}^n : \sum_{i=1}^{n} \delta_i \in 2\mathbb{Z} \right\},$$

where δ_i are the components of δ with respect to the standard basis (if nothing else is said about the components in the following then we mean with respect to the standard basis). This is a lattice since $D_n = \mathcal{D}\mathbb{Z}^n$, where $\mathcal{D} = (d_1, \ldots, d_n) = (e_1 - e_n, e_2 - e_n, \ldots, e_{n-1} - e_n, e_{n-1} + e_n)$. Indeed, for $\alpha \in \mathbb{Z}^n$

$$\mathcal{D}\alpha = \left(\sum_{i=1}^{n-2} \underbrace{\alpha_k}_{\in\mathbb{Z}} e_k \right) + \underbrace{(\alpha_{n-1} + \alpha_n)}_{\in\mathbb{Z}} e_{n-1} + \underbrace{\left(\left(\sum_{i=1}^{n-1} -\alpha_k \right) + \alpha_n \right)}_{\in\mathbb{Z}} e_n,$$

so that for $\delta = \mathcal{D}\alpha$

$$\sum_{i=1}^{n} \delta_i = 2\alpha_n \in 2\mathbb{Z}.$$

Note that we really need to show that the columns are linearly independent, but we will almost always skip this for brevity's sake.

Given any lattice we can consider its translation by some vector, which formally translates every point of the lattice along one unit of this vector. In essence such a translate is also a lattice but one that we cannot write in the form $A\mathbb{Z}^n$ for some $A \in GL_n(\mathbb{R})$ since the zero is removed. We will thus call these objects *translates of a lattice* in order to avoid confusion. For a given lattice Γ we denote its **translate** by $t \in \mathbb{R}^n$ by

$$\Gamma^t = \Gamma + t = \{v \in \mathbb{R}^n : v = \gamma + t,\ \gamma \in \Gamma\}.$$

For example we will consider $D_n + t$, where $\sum_{i=1}^n t_i \in 2\mathbb{Z} + 1$. This translate gives us the set of vectors whose components sum to an uneven integer

$$\hat{D}_n := D_n + t = \left\{\hat{\delta} \in \mathbb{Z}^n : \sum_{i=1}^n \hat{\delta}_i \in 2\mathbb{Z} + 1\right\},$$

which has the same basis $\mathcal{D}$ but acts on vectors $\alpha \in \mathbb{Z}^n$ by $\mathcal{D}\alpha + t$. We write $\hat{D}_n = \mathcal{D}\mathbb{Z}^n + t$. The reader can check that this satisfies the definition of $\hat{D}_n$ above.

The third lattice we shall consider here is the so called *n-dimensional diamond packing* E_n, called thus by virtue of the fact that E_3 has the structure of carbon atoms in a diamond. It is defined[1] by (for $\mathbf{1/2} = (1/2, \ldots, 1/2)$)

$$\begin{aligned} E_n &:= D_n \overset{\circ}{\cup} D_n^{\mathbf{1/2}} \overset{n \text{ even}}{=} \\ &= \left\{\xi \in \mathbb{Z}^n \overset{\circ}{\cup} (\mathbb{Z} + 1/2)^n : \sum_{i=1}^n \xi_i \in 2\mathbb{Z}\right\}, \end{aligned}$$

and is actually a lattice so long as n is even. Taking $n \in \mathbb{Z}$ note that $\mathbf{1/2}$ is in E_{4n} but not E_{2n}, whereas its multiple vector $\mathbf{1} = 2\mathbf{1/2}$ *is* in E_{2n}.

We shall be interested in E_8 and to see that it is a lattice we simply provide a basis $\mathcal{E}_8$ and right multiply it by $\alpha \in \mathbb{Z}^n$. Then,

$$\mathcal{E}_8\alpha = \begin{pmatrix} 1/2 & 0 & 0 & 0 & 0 & 0 & 0 & 0 \\ 1/2 & 1 & 0 & 0 & 0 & 0 & 0 & 0 \\ 1/2 & 0 & 1 & 0 & 0 & 0 & 0 & 0 \\ 1/2 & 0 & 0 & 1 & 0 & 0 & 0 & 0 \\ 1/2 & 0 & 0 & 0 & 1 & 0 & 0 & 0 \\ 1/2 & 0 & 0 & 0 & 0 & 1 & 0 & 0 \\ 1/2 & 0 & 0 & 0 & 0 & 0 & 1 & 1 \\ 1/2 & -1 & -1 & -1 & -1 & -1 & -1 & 1 \end{pmatrix} \alpha = \begin{pmatrix} \frac{1}{2}\alpha_1 \\ \frac{1}{2}\alpha_1 + \alpha_2 \\ \frac{1}{2}\alpha_1 + \alpha_3 \\ \frac{1}{2}\alpha_1 + \alpha_4 \\ \frac{1}{2}\alpha_1 + \alpha_5 \\ \frac{1}{2}\alpha_1 + \alpha_6 \\ \frac{1}{2}\alpha_1 + \alpha_7 + \alpha_8 \\ \frac{1}{2}\alpha_1 - \alpha_2 - \alpha_3 - \cdots - \alpha_7 + \alpha_8 \end{pmatrix} \tag{5.1}$$

so that setting $\xi = \mathcal{E}_8\alpha$ we get that

$$\sum_{i=1}^8 \xi_i = 2(\alpha_8 + 2\alpha_1) \in 2\mathbb{Z}.$$

Note moreover that depending on whether $\alpha_1 \in 2\mathbb{Z}$, for all $i = 1, 2, \ldots, 8$, ξ_i is either in $\mathbb{Z}$ or $(\mathbb{Z} + 1/2)$.

In order to construct the theta functions of these lattices and to be able to work with them, we next investigate how theta functions of lattices change under simple set operations. After this we shall see how these theta functions can all be constructed as superpositions of three particularly simple theta functions.

[1] $\overset{\circ}{\cup}$ means disjoint union.

Proposition 5.1 (Theta function building rules)**.**
In the following, Γ_1 *and* Γ_2 *are lattices or translates of lattices.*

(i) For $\Gamma_1 \subset \mathbb{R}^{n_1}$ *and* $\Gamma_2 \subset \mathbb{R}^{n_2}$*, where* $n_1 + n_2 = n \in \mathbb{Z}$*, let* $\Gamma = \Gamma_1 \overset{\perp}{+} \Gamma_2$ *(recall (2.1), this means* $\gamma \in \Gamma \implies \gamma = \gamma_1 + \gamma_2$ *where* $\gamma_1 \in \Gamma_1, \gamma_2 \in \Gamma_2$ *and* $\gamma_1^\mathsf{T}\gamma_2 = 0$*). Then*

$$\Theta_\Gamma = \Theta_{\Gamma_1}\Theta_{\Gamma_2}.$$

(ii) Let $\Gamma = \Gamma_1 \overset{\circ}{\cup} \Gamma_2$ *be a lattice, then*

$$\Theta_\Gamma = \Theta_{\Gamma_1} + \Theta_{\Gamma_2}.$$

Proof. (i) Note that $\gamma \in \Gamma$ takes the form $\gamma = (\gamma_1, \gamma_2) = \gamma_1 + \gamma_2$ and thus $\|\gamma\|^2 = \|\gamma_1\|^2 + 2\underbrace{\gamma_1^\mathsf{T}\gamma_2}_{=0} + \|\gamma_2\|^2$. This implies that

$$\begin{aligned}\Theta_\Gamma(w) &= \sum_{\gamma_{1,2}\in\Gamma_{1,2}} w^{\|\gamma_1\|^2+\|\gamma_2\|^2} = \\ &= \sum_{\gamma_{1,2}\in\Gamma_{1,2}} w^{\|\gamma_1\|^2} w^{\|\gamma_2\|^2} = \\ &= \sum_{\gamma_1\in\Gamma_1} w^{\|\gamma_1\|^2} \sum_{\gamma_2\in\Gamma_2} w^{\|\gamma_2\|^2} = \Theta_{\Gamma_1}(w)\Theta_{\Gamma_2}(w)\end{aligned}$$

(ii) This follows by definition of disjoint union, the elements are either in one lattice or the other and so

$$\begin{aligned}\Theta_\Gamma(w) &= \sum_{\gamma\in\Gamma} w^{\|\gamma\|^2} = \\ &= \sum_{\gamma_1\in\Gamma_1} w^{\|\gamma_1\|^2} + \sum_{\gamma_2\in\Gamma_2} w^{\|\gamma_2\|^2} = \Theta_{\Gamma_1}(w) + \Theta_{\Gamma_2}(w).\end{aligned}$$

□

Immediately we can show,

Proposition 5.2 (Ladder of non-spectrometry)**.**
Suppose we are given a pair of non-spectrometric tori $T^n_{\Gamma^*}$ *and* $T^n_{(\Gamma')^*}$ *in dimension* $n > 0$*. Then we can find a pair of non-spectrometric tori in dimension* $n + 1$*.*

Proof. Consider the vector $v = (w, 0, \ldots, 0) \in \mathbb{R}^{n+1}$ where w is strictly less than the length of any nonzero vector of Γ and Γ'. Then the lattice $v\mathbb{Z} = \{zv : z \in \mathbb{Z}\} = \mathbb{Z}v$ is embedded in $\mathbb{R}^{n+1}$. We now set

$$\overline{\Gamma} := \Gamma \overset{\perp}{+} \mathbb{Z}v, \ \overline{\Gamma'} := \Gamma' \overset{\perp}{+} \mathbb{Z}v.$$

These two have the same theta series by (i) of Proposition 5.1, so the tori $T^n_{\overline{\Gamma}^*}$ and $T^n_{\overline{\Gamma'}^*}$ are isospectral. Recall Corollary 3.3, they are isometric if and only

if we can find $C \in O_{n+1}(\mathbb{R})$ such that $\overline{\Gamma'} = C\overline{\Gamma}$. However, the only way $\overline{\Gamma}$ and $\overline{\Gamma'}$ can be rotated to each other, when Γ and Γ' can not be, is if v would get rotated to a vector of Γ' of different length than any vector of Γ. By definition of v, this situation never occurs. □

Thus the game from here is to try to exhibit a counterexample in so low a dimension as possible. The dimensions 12 and 16 require some discussion of a list of specific lattices.

Consider the simplest lattice $\mathbb{Z}$ of integers on the line. The norm of an integer squared is simply the integer squared, and so for every integer besides 0 we have two copies, thus giving us the theta function

$$\Theta_{\mathbb{Z}}(w) = \sum_{k\in\mathbb{Z}} w^{k^2} = 1 + 2w + 2w^4 + 2w^9 + \cdots = \Theta_3(w),$$

where $\Theta_3(w)$ is the third *Jacobi theta function*; which is one of the four elliptic[2] analogues of the exponential function. These theta functions (three of which to be precise) will be of great use to us.

Indeed, also the second is associated to the translate by $1/2$ of this lattice $\mathbb{Z}$:

$$\mathbb{Z} + 1/2 = \{h \in \mathbb{R} : h = z + 1/2,\ z \in \mathbb{Z}\} = \{\dots, -\frac{5}{2}, -\frac{3}{2}, -\frac{1}{2}, \frac{1}{2}, \frac{3}{2}, \frac{5}{2}, \frac{7}{2}, \dots\}.$$

We see immediately that the theta function is the same, but with the argument shifted by $+1/2$,

$$\Theta_{\mathbb{Z}+1/2}(w) = \sum_{k\in\mathbb{Z}} w^{(k+1/2)^2} = 2w^{1/4} + 2w^{9/4} + 2w^{25/4} + \dots,$$

and this is precisely the expression for the second Jacobi theta function $\Theta_2(w) = \sum_{k\in\mathbb{Z}} w^{(k+1/2)^2}$.

We will also have need of the fourth Jacobi theta function $\Theta_4(w) := \sum_{k\in\mathbb{Z}}(-w)^{k^2}$.

Proposition 5.3.
The theta functions of our considered lattices are all superpositions of the Jacobi theta functions, namely

$$\Theta_{\mathbb{Z}^n} = \Theta_3^n, \tag{5.2}$$

$$\Theta_{D_n} = \frac{1}{2}(\Theta_3^n + \Theta_4^n), \tag{5.3}$$

$$\Theta_{\hat{D}_n} = \frac{1}{2}(\Theta_3^n - \Theta_4^n), \tag{5.4}$$

$$\Theta_{E_n} = \frac{1}{2}(\Theta_2^n + \Theta_3^n + \Theta_4^n). \tag{5.5}$$

Proof. We shall make continued use of Prop. 5.1. First we note that

$$\mathbb{Z}^n = e_1\mathbb{Z} \overset{\perp}{+} e_2\mathbb{Z} \overset{\perp}{+} \cdots \overset{\perp}{+} e_n\mathbb{Z}$$

implying by Prop. 5.1 that $\Theta_{\mathbb{Z}^n} = \Theta_3^n$.

[2] A meromorphic function that is periodic in two distinct periods.

We will show (5.3) and (5.4) by induction. For the base case, note that $D_1 = 2\mathbb{Z}$. Then,

$$\frac{1}{2}(\Theta_3(w) + \Theta_4(w)) = 1 + 2w^4 + 2w^{16} + \cdots = \sum_{k\in\mathbb{Z}} w^{(2k)^2} = \Theta_{D_1}(w)$$

Since $\mathbb{Z} = D_1 \overset{\circ}{\cup} \hat{D}_1$, it holds that

$$\Theta_{\hat{D}_1} = \Theta_3^n - \frac{1}{2}(\Theta_3 + \Theta_4) = \frac{1}{2}(\Theta_3 - \Theta_4).$$

Let us proceed by assuming (5.3) and (5.4) for n and proving them for $n+1$. Observe that $\mathbb{Z}^{n+1} \ni (\alpha_1, \ldots, \alpha_n, \alpha_{n+1}) \in D_{n+1}$ gives two mutually exclusive cases based on whether $(\alpha_1, \ldots, \alpha_n) \in D_n$ or not. If true, then to make the $n+1$-sum equal to an even integer, α_{n+1} must be in D_1. If false, that is $(\alpha_1, \ldots, \alpha_n) \in \hat{D}_n$, then by the same token α_{n+1} must be uneven and so $\alpha_{n+1} \in \hat{D}_1$. Therefore we can write

$$D_{n+1} = (D_n \overset{\perp}{+} D_1) \overset{\circ}{\cup} (\hat{D}_n \overset{\perp}{+} \hat{D}_1),$$

allowing for the invocation once more of Prop. 5.1 to grant us

$$\begin{aligned}\Theta_{D_{n+1}} &= \Theta_{D_n}\Theta_{D_1} + \Theta_{\hat{D}_n}\Theta_{\hat{D}_1} = \\ &= \frac{1}{4}\left((\Theta_3^n + \Theta_4^n)(\Theta_3 + \Theta_4) + (\Theta_3^n - \Theta_4^n)(\Theta_3 - \Theta_4)\right) = \frac{1}{2}(\Theta_3^{n+1} + \Theta_4^{n+1}).\end{aligned}$$

For any element of $\mathbb{Z}^n$, its components under the standard basis can sum to either an even or an uneven integer. Thus $\mathbb{Z}^{n+1} = D_{n+1} \overset{\circ}{\cup} \hat{D}_{n+1}$, hence

$$\Theta_{\hat{D}_{n+1}} = \Theta_{\mathbb{Z}_{n+1}} - \Theta_{D_{n+1}} = \frac{1}{2}(\Theta_3^{n+1} - \Theta_4^{n+1}).$$

We are left to show (5.5), and by Prop. 5.1 it's enough to find the theta function for $D_n^{\mathbf{1/2}}$ by induction. By noting that $D_1^{1/2} = \{\ldots, -7/2, -3/2, 1/2, 5/2, 9/2, \ldots\}$, the base case follows as

$$\Theta_{D_1^{1/2}} = \sum_{k\in D_1^{1/2}} w^{k^2} = w^{1/4} + w^{9/4} + w^{25/4} + \cdots = \frac{1}{2}\Theta_2.$$

Now, since $D_n^{\mathbf{1/2}}$ is simply a translate in every component of D_n with respect to the standard basis, it inherits the decomposition of D_n, namely

$$D_{n+1}^{\mathbf{1/2}} = (D_n^{\mathbf{1/2}} \overset{\perp}{+} D_1^{1/2}) \overset{\circ}{\cup} (\hat{D}_n^{\mathbf{1/2}} \overset{\perp}{+} \hat{D}_1^{1/2}).$$

Moreover since $\hat{D}_1^{1/2} = \{\ldots, -9/2, -5/2, -1/2, 3/2, 7/2, \ldots\}$ it has the same theta function $\Theta_{\hat{D}_1^{1/2}} = \frac{1}{2}\Theta_2$. Suppose then that $D_n^{\mathbf{1/2}} = \hat{D}_n^{\mathbf{1/2}} = \frac{1}{2}\Theta_2^n$ and let us

show,

$$\Theta_{D_{n+1}^{\mathbf{1/2}}} = \Theta_{(D_n^{\mathbf{1/2}\perp}+D_1^{1/2})^\circ\cup(\hat{D}_n^{\mathbf{1/2}\perp}+\hat{D}_1^{1/2})} \overset{\text{Prop. 5.1}}{=} \\ = \Theta_{D_n^{\mathbf{1/2}}}\Theta_{D_1^{1/2}} + \Theta_{\hat{D}_n^{\mathbf{1/2}}}\Theta_{\hat{D}_1^{1/2}} = \frac{1}{2}\Theta_2^{n+1}.$$

By $\Theta_{E_{n+1}} = \Theta_{D_{n+1}} + \Theta_{D_{n+1}^{\mathbf{1/2}}}$ we immediately receive (5.5). The argument for $\hat{D}_{n+1}^{\mathbf{1/2}}$ is very similar and left as an exercise. □

The Jacobi theta functions obey a set of algebraic rules, which constitute the last bit of information we need to tackle spectrometry of 16- and 12-dimensional tori.

Proposition 5.4.
The following relation is true,

$$\Theta_2^4 + \Theta_4^4 = \Theta_3^4, \tag{5.6}$$

from which it follows that

$$\Theta_3^{12} + \Theta_4^{12} = \frac{1}{2}(\Theta_3^4 + \Theta_4^4)(\Theta_2^8 + \Theta_3^8 + \Theta_4^8), \tag{5.7}$$

$$\Theta_2^{16} + \Theta_3^{16} + \Theta_4^{16} = \frac{1}{2}(\Theta_2^8 + \Theta_3^8 + \Theta_4^8)^2. \tag{5.8}$$

Proof. The first relation (5.6) hinges on the fact that E_4 will be shown to be congruent to $\mathbb{Z}^4$. Recall that congruence is equivalent to the existence of an orthogonal automorphism $C \in O_4(\mathbb{R})$ such that $CE_4 = \mathbb{Z}^4$ (it is enough that the basis of one lattice gets mapped by C to the basis of the other). In particular their congruence implies isospectrality, whereby comparing $\Theta_{\mathbb{Z}^4} = \Theta_3^4$ with $\Theta_{E_4} = \frac{1}{2}(\Theta_2^4 + \Theta_3^4 + \Theta_4^4)$ gives the result.

An orthonormal basis for E_4 is given by

$$\mathcal{E}_4 = \begin{pmatrix} 1/2 & 1/2 & 1/2 & 1/2 \\ 1/2 & -1/2 & 1/2 & -1/2 \\ 1/2 & -1/2 & -1/2 & 1/2 \\ 1/2 & 1/2 & -1/2 & -1/2 \end{pmatrix}, \text{ so that } \xi := \mathcal{E}_4\alpha = \begin{pmatrix} \frac{1}{2}(\alpha_1+\alpha_2+\alpha_3+\alpha_4) \\ \frac{1}{2}(\alpha_1-\alpha_2+\alpha_3-\alpha_4) \\ \frac{1}{2}(\alpha_1-\alpha_2-\alpha_3+\alpha_4) \\ \frac{1}{2}(\alpha_1+\alpha_2-\alpha_3-\alpha_4) \end{pmatrix}$$

gives $\sum_{i=1}^4 \xi_i \in 2\mathbb{Z}$ and two mutually exclusive cases $\forall i = 1,2,3,4$, namely $\xi_i \in \mathbb{Z}$ or $\xi_i \in \mathbb{Z} + 1/2$.

By virtue of the orthonormality of $\mathcal{E}_4$, consider taking $C = \mathcal{E}_4^\mathsf{T}$. The reader can verify that $\mathcal{E}_4^\mathsf{T}\mathcal{E}_4 = I$, with I being the identity matrix of orthonormal basis vectors to $\mathbb{Z}^4$.

From here showing (5.7) and (5.8) is a matter of plug and play, although since the author spent a particularly gruesome two hours on (5.8) we give the details below.

$$\frac{1}{2}(\Theta_3^4+\Theta_4^4)(\underbrace{\Theta_2^8}_{(\Theta_2^4)^2}+\Theta_3^8+\Theta_4^8)=$$
$$=\frac{1}{2}(2\Theta_3^{12}-2\Theta_3^8\Theta_4^4+2\Theta_3^4\Theta_4^8+2\Theta_3^8\Theta_4^4-2\Theta_3^4\Theta_4^8+\Theta_4^{12})=\Theta_3^{12}+\Theta_4^{12}.$$

$$\frac{1}{2}(\Theta_2^{16}+\Theta_3^{16}+\Theta_4^{16})+\frac{1}{2}(\underbrace{\Theta_2^8}_{(\Theta_2^4)^2}\Theta_2^8+\underbrace{\Theta_3^8}_{(\Theta_3^4)^2}\Theta_3^8+\underbrace{\Theta_4^8}_{(\Theta_4^4)^2}\Theta_4^8)=$$
$$=\frac{1}{2}(\Theta_2^{16}+\Theta_3^{16}+\Theta_4^{16})+$$
$$+\frac{1}{2}(\Theta_2^8\Theta_3^8-2\Theta_2^8\Theta_3^4\Theta_4^4+\Theta_2^8\Theta_4^8+\Theta_2^8\Theta_3^8+2\Theta_2^4\Theta_3^8\Theta_4^4+\Theta_3^8\Theta_4^8+\Theta_2^8\Theta_4^8-2\Theta_2^4\Theta_3^4\Theta_4^8+\Theta_3^8\Theta_4^8)=$$
$$=\frac{1}{2}(\Theta_2^{16}+\Theta_3^{16}+\Theta_4^{16}+2\Theta_2^8\Theta_3^8+2\Theta_2^8\Theta_4^8+2\Theta_3^8\Theta_4^8)+\Theta_2^4\Theta_3^4\Theta_4^4(\underbrace{-\Theta_2^4+\Theta_3^4-\Theta_4^4}_{=0})=$$
$$=\frac{1}{2}(\Theta_2^8+\Theta_3^8+\Theta_4^8)^2.$$

□

Finally, as promised, we are ready to show that 16- and 12-dimensional tori are not spectrometric.

Theorem 5.5.
Two 16-dimensional tori do not need to be spectrometric.

Proof. For our counterexample we pick $T^{16}_{E_{16}}$ and $T^{16}_{E_8^{\perp}+E_8}$. Let us first claim for all $n\in\mathbb{N}$ that $E_{8n}=E_{8n}{}^*$, i.e. E_{8n} is self-dual. To see this, $E_{8n}{}^*=\{\xi^*\in\mathbb{R}^{8n}:\xi^{\mathsf{T}}\xi^*\in\mathbb{Z}\ \forall\xi\in E_{8n}\}$ and since every $\xi\in E_{8n}$ can be written as a linear combination of basis elements in $\mathcal{E}_{8n}$ it's enough to check these (we pick $\mathcal{E}_{8n}$ to be the corresponding extended basis to $\mathcal{E}_8$, see (5.1)). For $\gamma^*\in\mathbb{R}^n$,

$$\begin{pmatrix}\epsilon_1^{\mathsf{T}}\gamma^*\\ \epsilon_2^{\mathsf{T}}\gamma^*\\ \vdots\\ \epsilon_{8n}^{\mathsf{T}}\gamma^*\end{pmatrix}=\begin{pmatrix}\frac{1}{2}\sum_{i=1}^{8n}\gamma_i^*\\ \gamma_2^*-\gamma_{8n}^*\\ \gamma_3^*-\gamma_{8n}^*\\ \vdots\\ \gamma_{8n-1}^*-\gamma_{8n}^*\\ \gamma_{8n-1}^*+\gamma_{8n}^*\end{pmatrix}\in\mathbb{Z}^{8n},$$

which implies first that $\sum_{i=1}^{8n}\gamma_i^*\in 2\mathbb{Z}$. Moreover, if we add the last entry with the second to last, then it is clear that $\gamma_{8n-1}^*\in\frac{1}{2}\mathbb{Z}=\mathbb{Z}\mathbin{\mathring{\cup}}(\mathbb{Z}+1/2)$ which implies that the same is true for γ_{8n}^*, i.e. $\gamma_{8n}^*\in\frac{1}{2}\mathbb{Z}$. Therefore we can see that if $\gamma_{8n}^*\in\mathbb{Z}$ then the rest must follow suit: $\gamma_1^*,\gamma_2^*,\gamma_3^*,\ldots,\gamma_{8n-1}^*\in\mathbb{Z}$, vice versa the same is true in the other case of $\gamma_{8n}^*\in\mathbb{Z}+1/2$. Hence E_{8n} is self-dual and this we know by Prop. 2.4 implies that $E_8\overset{\perp}{+}E_8$ is also self-dual.

Thus since

$$\Theta_{E_8 \overset{\perp}{+} E_8} \overset{(5.5)}{=} \frac{1}{4}(\Theta_2^8 + \Theta_3^8 + \Theta_4^8)^2 \overset{(5.8)}{=} \frac{1}{2}(\Theta_2^{16} + \Theta_3^{16} + \Theta_4^{16}) \overset{(5.5)}{=} \Theta_{E_{16}}$$

our two chosen tori are isospectral.

By contradiction suppose they are isometric, that there by virtue of Theorem 3.2 exists an orthogonal automorphism $C \in O_{16}(\mathbb{R})$ such that $E_{16} = C(E_8 \overset{\perp}{+} E_8)$. Then in particular we must have $\mathcal{E}_{16} = C\mathcal{E}_{16}^{\perp}$, where we have received $\mathcal{E}_{16}^{\perp} = \begin{pmatrix} \mathcal{E}_8 & 0 \\ 0 & \mathcal{E}_8 \end{pmatrix}$ from Prop. 2.2. Note that every column basis vector of $\mathcal{E}_{16}^{\perp}$ has length $\sqrt{2}$ and that this property must continue to hold for any basis vector in $\mathcal{E}_{16}$ by the properties of $C \in O_{16}(\mathbb{R})$. Now, all vectors of $\mathcal{E}_{16}$ are of the forms

$$\sum_{i=1}^{16} \xi_i e_i \text{ or } \sum_{i=1}^{16} (\xi_i + 1/2) e_i \text{ such that } \xi_1, \xi_2, \ldots, \xi_{16} \in \mathbb{Z} \ \& \ \sum_{i=1}^{16} \xi_i \in 2\mathbb{Z},$$

and since we cannot generate a vector of the second form using only vectors of the first, we must have a vector $\xi = \sum_{i=1}^{16}(\xi_i + 1/2)e_i$ in our basis $\mathcal{E}_{16}$. This yields a contradiction, since

$$\|\xi\| = \sqrt{\sum_{i=1}^{16} \underbrace{(\xi_i + 1/2)^2}_{\geq 1/4}} \geq 2.$$

□

The above result in 16 dimensions was first noticed by Milnor[17] in 1964, after he noted that the two lattices found non-isometric by Witt in 1941 were regardless isospectral. In 1967 Kneser[13] observed the existence of a 12-dimensional non-spectrometric counterexample.

Theorem 5.6.
Two 12-dimensional tori do not need to be spectrometric.

Proof. For this counterexample let us pick the tori $T^{12}_{D_{12}^*}$ and $T^{12}_{\left(E_8 \overset{\perp}{+} D_4\right)^*}$. By a direct application of Prop. 5.1, Prop. 5.3 and Prop. 5.4 we get isospectrality as

$$\Theta_{E_8 \overset{\perp}{+} D_4} = \Theta_{E_8}\Theta_{D_4} = \frac{1}{2}\frac{1}{2}(\Theta_3^4 + \Theta_4^4)(\Theta_2^8 + \Theta_3^8 + \Theta_4^8) \overset{(5.7)}{=} \frac{1}{2}(\Theta_3^{12} + \Theta_4^{12}) = \Theta_{D_{12}}.$$

Suppose by contradiction that the tori are isometric so that there by Corollary 3.3 is a $C \in O_{12}(\mathbb{R})$ turning $E_8 \overset{\perp}{+} D_4$ into D_{12} by $D_{12} = C\left(E_8 \overset{\perp}{+} D_4\right)$. Consider then the following basis of

$$E_8 \overset{\perp}{+} D_4 = \{\gamma \in \mathbb{Z}^{12} \overset{\circ}{\cup} ((\mathbb{Z}+1/2)^8 \times \mathbb{Z}^4) : \sum_{i=1}^{16} \gamma_i \in 2\mathbb{Z} \text{ and } \gamma = \underbrace{\gamma'}_{\in E_8} + \underbrace{\gamma''}_{\in D_4} \text{ s.t. } \gamma'^{\intercal}\gamma'' = 0\},$$

$$\mathcal{F}_{12} = (f_1 f_2 \dots f_{12}) =$$
$$= \begin{pmatrix} 1/2 & 0 & 0 & \dots & 0 & 0 & 0 & 0 & 0 & 0 & 0 \\ 1/2 & 1 & 0 & \dots & 0 & 0 & 0 & 0 & 0 & 0 & 0 \\ \vdots & 0 & 1 & \dots & \vdots & \vdots & \vdots & \vdots & \vdots & \vdots & \vdots \\ \vdots & \vdots & 0 & \ddots & 0 & \vdots & \vdots & \vdots & \vdots & \vdots & \vdots \\ \vdots & \vdots & \vdots & \dots & 1 & 0 & 0 & \vdots & \vdots & \vdots & \vdots \\ \vdots & 0 & 0 & \dots & 0 & 1 & 1 & 0 & \vdots & \vdots & \vdots \\ 1/2 & -1 & -1 & \dots & -1 & -1 & 1 & 0 & \vdots & \vdots & \vdots \\ 0 & 0 & 0 & \dots & 0 & 0 & 0 & 1 & 0 & \vdots & \vdots \\ 0 & 0 & 0 & \dots & 0 & 0 & 0 & 0 & 1 & 0 & 0 \\ 0 & 0 & 0 & \dots & 0 & 0 & 0 & 0 & 0 & 1 & 1 \\ 0 & 0 & 0 & \dots & 0 & 0 & 0 & -1 & -1 & -1 & 1 \end{pmatrix}.$$

The reader can verify that this constitutes a proper basis for $E_8 \overset{\perp}{+} D_4$ by the exact same procedure as we have done previously in this text. Note that all basis vectors are of length $\sqrt{2}$, which will translate by the isometry to the basis $C\mathcal{F}_{12}$ of D_{12}. But therein lies the key point of the coming contradiction - the vectors of length $\sqrt{2}$ of D_{12} are very special.

Recall $D_{12} = \{\delta \in \mathbb{Z}^{12} : \sum_{i=1}^{12} \delta_i \in 2\mathbb{Z}\}$. Since with respect to the standard basis we are dealing with integer components, for $\delta \in D_{12}$ we have

$$\|\delta\| = \sqrt{\sum_{i=1}^{12} \delta_i^2} = \sqrt{2} \implies |\delta_i| < 2 \ \forall i \implies$$
$$\implies \exists k, l \in \mathbb{N} : \delta_k = \pm 1, \delta_l = \pm 1 \ \& \ \delta_i = 0 \text{ for } i \notin \{k, l\}.$$

Thus the only vectors δ in D_{12} of length $\sqrt{2}$ take the form $\delta = p_\delta e_k + q_\delta e_l$ with $k \neq l$ and $p_\delta, q_\delta \in \{+1, -1\}$.

Now note that the inner product $d_i^\mathsf{T} d_j$ of any two vectors $d_i, d_j \in C\mathcal{F}_{12}$ is equal to $f_i^\mathsf{T} f_j$ since $d_i = Cf_i$ for all $i = 1, 2, \dots, 12$. The same is of course true for $|d_i^\mathsf{T} d_j| = |d_i||d_j||\cos \sphericalangle(d_i, d_j)|$, so intuitively we can say that the angles between vectors remain unchanged and we will use this to produce a contradiction. Let us next completely characterise what happens for distinct basis vectors $d_i, d_j \in C\mathcal{F}_{12}$,

$$|d_i^\mathsf{T} d_j| = |(p_i e_k + q_i e_l)^\mathsf{T}(p_j e_m + q_j e_n)| = |p_i p_j e_k^\mathsf{T} e_m + p_i q_j e_k^\mathsf{T} e_n + q_i p_j e_l^\mathsf{T} e_m + q_i q_j e_l^\mathsf{T} e_n| \tag{5.9}$$

Note that we can never get $|d_i^\mathsf{T} d_j| = 4$ since that would contradict $k \neq l$ and $m \neq n$.

If the vectors are colinear, that is $d_i = \pm d_j$, then $|d_i^\mathsf{T} d_j| = 2$. On the other hand if $|d_i^\mathsf{T} d_j| = 2$ we must have both $k, l \in \{m, n\}$. The cases are analogous, so suppose $k = m$ and $l = n$. Then $|d_i^\mathsf{T} d_j| = |p_i p_j + q_i q_j| = 2$ only if $p_j = p_i$ & $q_j = q_i$

or $p_j = -p_i$ & $q_j = -q_i$. The first case means that $d_i = d_j$ while the second implies $d_i = -d_j$, in other words the vectors are colinear.

If $\{k,l\} \cap \{m,n\}$ only contains one single element, e.g. $k = m, l \neq n$, then $|d_i^\intercal d_j| = 1$. If $|d_i^\intercal d_j| = 1$ then we must have a single summand in the right hand side of (5.9), and the only possibility for this is that $|\{k,l\} \cap \{m,n\}| = 1$. Indeed, the only other option lies in supposing $k = m$,$l = n$, which cannot give us $1 = |d_i^\intercal d_j|$.

Suppose no indices out of k, l, m or n are equal, then obviously $|d_i^\intercal d_j| = 0$. However there is another way this can occur, namely if $\{k,l\} = \{m,n\}$ while d_i, d_j are *not* colinear. Then, e.g. for $k = m, l = n$, (5.9) simplifies to $|p_i p_j + q_i q_j|$ and so if $p_i p_j = -q_i q_j$ we get 0. How can this happen? Well suppose $p_i = p_j$, then $q_i = -q_j$ and vice versa, here this means that $d_i = p_i e_k + q_i e_l = p_j e_m - q_j e_l \neq \pm d_j$, i.e. d_i and d_j are not colinear.

Thus we are left to conclude

$$|d_i^\intercal d_j| = \begin{cases} 2, \text{ IFF } d_i, d_j \text{ colinear,} \\ 1, \text{ IFF } |\{k,l\} \cap \{m,n\}| = 1, \\ 0, \text{ IFF } \{k,l\} \cap \{m,n\} = \emptyset \text{ or } \{k,l\} = \{m,n\} \text{ and } d_i, d_j \text{ not colinear.} \end{cases} \tag{5.10}$$

Let us follow [8] and, knowing the exact form of all f_i, construct the following table where each entry (i,j) is the result of $|d_i^\intercal d_j| = |f_i^\intercal f_j|$,

	d_1	d_2	d_3	d_4	d_5	d_6	d_7	d_8
d_1	2	0	0	0	0	0	0	1
d_7	0	1	1	1	1	1	1	1
d_8	1	1	1	1	1	1	0	2

In the following we keep (5.10) in mind. First make note of $|d_1^\intercal d_8| = 1$ so that $d_1 = p_1 e_K + q_1 e_L$ and $d_8 = p_8 e_K + q_8 e_M$, for fixed $K, L, M \in \mathbb{N}$. Now consider $d_7 = p_7 e_k + q_7 e_l$. Since both $|d_7^\intercal d_1| = 0$ and $|d_7^\intercal d_8| = 0$, d_7 must have distinct basis vectors from e_K, e_L and e_M, that is $d_7 = p_7 e_X + q_7 e_Y$ for $\mathbb{N} \ni X, Y \notin \{K, L, M\}$. Indeed if say $|d_1^\intercal d_7| = 0$ would imply the other case then $\{k,l\} = \{K,L\}$ while $\{k,l\} \cap \{K,M\} = \emptyset$, a contradiction. Otherwise if both would imply the other case then $\{k,l\} = \{K,L\} = \{K,M\}$ and yet we know $M \neq L$ since $|d_1^\intercal d_8| = 1$, another contradiction. Note that there are other cases to consider, but their analysis is analogous, so we skip them for the sake of brevity.

For the rest $i = 1, 2, \ldots, 6$ of $d_i = p_i e_{m_i} + q_i e_{n_i}$ we have $|d_i^\intercal d_7| = 1$ and $|d_i^\intercal d_8| = 1$, which must mean that $m_i \in \{X, Y\}$ and $n_i \in \{K, M\}$. But this implies that $\{d_1, d_2, \ldots, d_8\} \subset \mathrm{Span}(e_K, e_L, e_M, e_X, e_Y)$ and so the set $\{d_1, d_2, \ldots, d_{12}\}$ cannot possibly constitute a basis. Contradiction! □

5.2 Conway and Sloane's 4-dimensional family

In this section we follow [10].

Consider a lattice $L \subset \mathbb{R}^4$. A sublattice (a subspace which is also a lattice) can then be constructed as $3L := \{3l : l \in L\}$. What happens if we quotient L by $3L$ as $L/3L$? Since L is isomorphic to $\mathbb{Z}^4$ by a change of variables we receive the so-called linear code $\mathbb{F}_3^4 \cong \mathbb{Z}^4/3\mathbb{Z}^4$.

A linear code C of length n is a linear subspace of the vector space $\mathbb{F}_q^n$, where $\mathbb{F}_q$ is a finite field of q elements[3]. Since every finite field of prime q elements is isomorphic to $\{0, 1, \ldots, q-1\}$ with addition and multiplication defined modulo q, we can write

$$\mathbb{F}_3^4 = \left\{ \alpha \begin{pmatrix} 1 \\ 0 \\ 0 \\ 0 \end{pmatrix} + \beta \begin{pmatrix} 0 \\ 1 \\ 0 \\ 0 \end{pmatrix} + \gamma \begin{pmatrix} 0 \\ 0 \\ 1 \\ 0 \end{pmatrix} + \delta \begin{pmatrix} 0 \\ 0 \\ 0 \\ 1 \end{pmatrix} : \alpha, \beta, \gamma, \delta \in \{-1, 0, 1\} \right\}.$$

In other words $\mathbb{F}_3^4$ consists of equivalence classes whose elements are equivalent if and only if they differ by an element of $3\mathbb{Z}^4$. For instance $\begin{pmatrix} 1 \\ 2 \\ 0 \\ 1 \end{pmatrix}$ and $\begin{pmatrix} 4 \\ -1 \\ 3 \\ 1 \end{pmatrix}$ are the same since they differ by $\begin{pmatrix} 3 \\ -3 \\ 3 \\ 0 \end{pmatrix}$.

As we always have with quotient sets, the natural surjection

$$\pi : L \to {}^{\mathbb{Z}^4}\big/_{3\mathbb{Z}^4}$$

is defined. It takes an element $l \in L$ and sends it to the equivalence class $\pi(l)$ for which it is a representative. In this case however it is not representing $\pi(l)$ as itself, but rather as its isomorphic copy in $\mathbb{Z}^4$. Thus another $l' \in \pi(l)$ if and only if $l - l' \in 3\mathbb{Z}^4$. From here we can take the preimage of any linear code $C \subset \mathbb{Z}^4/3\mathbb{Z}^4$, and this will define a sublattice of L containing $3L$. Indeed

$$\pi^{-1}(C) = \{l \in L : \pi(l) \in C\}$$

and since 0 is always in $\pi^{-1}(C)$, this implies that $\pi(3l) \in C$ so that $3l \in \pi^{-1}(C)$. Let us heuristically assume that we have a way of choosing the 'simplest' representatives of C, and collect these in a set B. Then it is clear that every $l \in \pi^{-1}(C)$ has the unique form $l = b + 3l'$ where $b \in B$ and $l' \in L$. We shall have use of this very soon.

There are two codes we are especially interested in. They are found by considering so-called self-dual codes, but we will not concern ourselves with this. Let $v_0 = w_0 = 0$,

$$v_1 = \begin{pmatrix} 1 \\ -1 \\ 1 \\ 0 \end{pmatrix}, v_2 = \begin{pmatrix} 0 \\ 1 \\ 1 \\ -1 \end{pmatrix}, v_3 = \begin{pmatrix} -1 \\ 0 \\ 1 \\ 1 \end{pmatrix}, v_4 = \begin{pmatrix} -1 \\ -1 \\ 0 \\ -1 \end{pmatrix}$$

[3]They are used in coding theory to help with transmitting information that can in some sense correct itself should some components be lost.

and

$$w_1 = \begin{pmatrix} 1 \\ -1 \\ 1 \\ 0 \end{pmatrix}, w_2 = \begin{pmatrix} 1 \\ 1 \\ 0 \\ -1 \end{pmatrix}, w_3 = \begin{pmatrix} 0 \\ -1 \\ -1 \\ -1 \end{pmatrix}, w_4 \begin{pmatrix} 1 \\ 0 \\ -1 \\ 1 \end{pmatrix}.$$

Then the codes are the following subspaces of $\mathbb{F}_3^4$,

$$C_1 = \{[0], \pm[v_1], \pm[v_2], \pm[v_3], \pm[v_4]\} \text{ and } C_2 = \{[0], \pm[w_1], \pm[w_2], \pm[w_3], \pm[w_4]\}.$$

From these we define the lattices $L_1 := \pi^{-1}(C_1)$ and $L_2 := \pi^{-1}(C_2)$. By our previous discussion, for some $l \in L$ and $i \in \{0, 1, 2, 3, 4\}$, any element of L_1 takes the form $v_i + 3l$ while any element of L_2 takes the form $w_i + 3l$.

Proposition 5.1.
The flat tori $T^4_{L_1}$ and $T^4_{L_2}$ are isospectral.

Proof. Consider the following set of orthogonal maps from $\mathbb{Z}^4$ to itself,

$$K_4 = \left\{ g_1 = id, g_2 = \begin{pmatrix} 0 & 0 & 1 & 0 \\ 0 & 0 & 0 & -1 \\ 1 & 0 & 0 & 0 \\ 0 & -1 & 0 & 0 \end{pmatrix}, g_3 = \begin{pmatrix} 0 & 1 & 0 & 0 \\ 1 & 0 & 0 & 0 \\ 0 & 0 & 0 & -1 \\ 0 & 0 & -1 & 0 \end{pmatrix}, g_4 = g_3 g_2 \right\}.$$

Not only are they orthogonal, they are also symmetric with the property that $g_i v_i = w_i$ and $g_i w_i = v_i$ for all $i = 1, 2, 3, 4$. In particular this means that v_i and w_i have the same length. Therefore we may construct a length-preserving map $\Psi : L_1 \to L_2$ by

$$\begin{cases} \Psi(3l) = 3l, \\ \Psi(v_i \pm 3l) = g_i(v_i \pm 3l) = w_i \pm g_i(3l) \end{cases}, \text{ for } l \in L \text{ and } i \in \{1, 2, 3, 4\}.$$

The map has an inverse $\Psi^{-1} : L_2 \to L_1$ constructed in a similar manner as

$$\begin{cases} \Psi^{-1}(3l) = 3l, \\ \Psi^{-1}(w_i \pm 3l) = g_i(w_i \pm 3l) = v_i \pm g_i(3l) \end{cases}, \text{ for } l \in L \text{ and } i \in \{1, 2, 3, 4\}.$$

Hence the vectors of L_1 and L_2 are of the same length, by virtue of this invertible map Ψ. □

From here we just need to find a specific example of L_1 and L_2 by choosing some particular L to start with. Let $a, b, c, d \in \mathbb{R}$ and consider the following vectors

$$u_1 = a \begin{pmatrix} -1 \\ 1 \\ 1 \\ 1 \end{pmatrix}, u_2 = b \begin{pmatrix} 1 \\ -1 \\ 1 \\ 1 \end{pmatrix}, u_3 = c \begin{pmatrix} 1 \\ 1 \\ -1 \\ 1 \end{pmatrix} \text{ and } u_4 = d \begin{pmatrix} 1 \\ 1 \\ 1 \\ -1 \end{pmatrix}.$$

From them let us construct a basis matrix $A = A(a, b, c, d)$ which shall define our lattice as $L = A\mathbb{Z}^n$. Let the first column vector a_1 of $A = (a_1\ a_2\ a_3\ a_4)$ be given

as $a_1 = -u_1 + 3u_2 - u_3 + u_4$. Similarly we define $a_2 = u_1 - u_2 - u_3 + 3u_4, a_3 = -u_1 - u_2 + u_3 + 3u_4$ and $a_4 = -u_1 + u_2 - u_3 + 3u_4$ so that the lattice $L = A\mathbb{Z}^4$ is defined by the basis

$$A = \begin{pmatrix} a+3b-c+d & -a-b-c+3d & a-b+c+3d & a+b-c+3d \\ -a-3b-c+d & a+b-c+3d & -a+b+c+3d & -a-b-c+3d \\ -a+3b+c+d & a-b+c+3d & -a-b-c+3d & -a+b+c+3d \\ -a+3b-c-d & a-b-c-3d & -a-b+c-3d & -a+b-c-3d \end{pmatrix}.$$

Theorem 5.2.
The flat tori $T^4_{L_1}$ and $T^4_{L_2}$ are not always isometric.

Proof. Take L defined by A as above. Then we DO NOT see that $L_1 = \mathrm{Span}_{\mathbb{Z}^4}(a_1, a_2, 3a_3, 3a_4)$ while $L_2 = \mathrm{Span}_{\mathbb{Z}^4}(a_1, 3a_2, a_3, 3a_4)$. A side comment unrelated to the proof is that these two lattices L_1 and L_2 respectively correspond to L^+ and L^- of [7] and [6] up to elementary row operations. Let now $a = 1, b = 7, c = 13$ and $d = 19$ all prime. Then

$$L_1 = \begin{pmatrix} 28 & 36 & 192 & 156 \\ -16 & 52 & 228 & 108 \\ 52 & 64 & 108 & 228 \\ -12 & -76 & -156 & -192 \end{pmatrix}\mathbb{Z}^4 \text{ while } L_2 = \begin{pmatrix} 28 & 108 & 64 & 156 \\ -16 & 156 & 76 & 108 \\ 52 & 192 & 36 & 228 \\ -12 & -228 & -52 & -192 \end{pmatrix}\mathbb{Z}^4.$$

A simple check reveals that there is no $C \in O_4(\mathbb{R})$ transforming L_1 to L_2 or vice-versa. □

6

Spectrometry of low-dimensional flat tori

Showing that flat tori are spectrometric in low-dimensional settings is quite easy in one dimension, slightly more difficult in two dimensions, and very very hard in three. In fact the latest result in this whole theory of spectrometry of flat tori is Schiemann's proof of three dimensional spectrometry [21], given in 1997. In addition, the result by Schiemann is only found after careful searching - in it there is no mention of either lattices of flat tori.

The problem to decide whether any given pair of flat tori are spectrometric turns out to be equivalent to problem in number theory, that is to decide whether positive definite quadratic forms are determined up to integral equivalence by their representation numbers (or *theta series*). We encountered this term in Chapter 4.1, and in fact it is precisely the same series as the *partition function* of differential geometry.

Before continuing let us give a disclaimer about three dimensions. We shall not prove this result since the only proof available requires a deep dive into the number theory of quadratic forms - most of which is perhaps not so useful for an analyst or geometer in the sense that the knowledge cannot be pulled back for use in the differential geometric setting. We shall however give all information regarding the equivalence between the two problems, namely spectrometry of flat tori versus representation number equivalence of quadratic forms.

We start by associating uniquely to every torus an equivalence class of quadratic forms.

6.1 Constructing the bijection

Consider again the general linear group $GL_n(\mathbb{R})$. There is a natural map p from this set onto the set $S_n^+(\mathbb{R})$ of positive definite symmetric matrices, defined by

$$p : A \mapsto A^{\mathsf{T}} A.$$

The result is indeed positive definite, since we have $x^{\mathsf{T}} A^{\mathsf{T}} A x = \|Ax\|^2 > 0$ for any $x \in \mathbb{R}^n \setminus \{0\}$. Note that any positive definite symmetric matrix can be written in this manner by way of Cholesky decomposition.

To investigate if p is injective suppose $p(A) = p(A')$ for $A, A' \in GL_n(\mathbb{R})$. Then

$$A^{\mathsf{T}} A = A'^{\mathsf{T}} A' \tag{6.1}$$

which implies $AA'^{-1} = A^{-\mathsf{T}}A'^{\mathsf{T}}$. This is equivalent to writing $AA'^{-1}(AA'^{-1})^{\mathsf{T}} = I$, implying $AA'^{-1} = C \in O_n(\mathbb{R})$, i.e. A is equal to A' *up to* an orthogonal matrix.

Therefore we do not have a bijection *yet*, but we know precisely the procedure required to get one. Indeed, the map

$$\begin{aligned} \overline{p} : {GL_n(\mathbb{R})}\big/{O_n(\mathbb{R})} &\longrightarrow S_n^+(\mathbb{R}) \\ [A] &\longmapsto \overline{p}([A]) = A^{\mathsf{T}}A \end{aligned}$$

does the job. Its existence is guaranteed by the Fundamental theorem on homomorphisms.

We now identify $S_n^+(\mathbb{R})$ with the set of positive definite quadratic forms[1] by setting q_A to be the form whose matrix is $A^{\mathsf{T}}A$, that is $q_A(x) = x^{\mathsf{T}}A^{\mathsf{T}}Ax = \|Ax\|^2$ for $x \in \mathbb{R}^n$. To connect to lattices (and thus tori), we quotient this set by $GL_n(\mathbb{Z})$ and consider (recall Prop. 2.1) the natural surjective map

$$\pi : {GL_n(\mathbb{R})}\big/{GL_n(\mathbb{Z})} \to {S_n^+(\mathbb{R})}\big/{GL_n(\mathbb{Z})}.$$

The elements of ${S_n^+(\mathbb{R})}\big/{GL_n(\mathbb{Z})}$ are equivalence classes defined by the relation

$$q_{A'} \sim q_A \iff q_{A'}(x) = q_A(Bx)\ \forall x \in \mathbb{R}^n, \text{ some } B \in GL_n(\mathbb{Z}).$$

This corresponds well to the quotient in the domain of π, since $q_A(Bx) = q_{AB}(x)$. Thus we can state the relation alternatively as

$$q_{A'} \sim q_A \iff q_{A'} = q_{AB}.$$

The acute reader may be seeing where this is going, and indeed π will only be injective from tori, and not from lattices in ${GL_n(\mathbb{R})}\big/{GL_n(\mathbb{Z})}$.

To see this take two lattices Γ_1, Γ_2 and choose respective bases A_1, A_2 so that $\Gamma_1 = A_1\mathbb{Z}^n$ and $\Gamma_2 = A_2\mathbb{Z}^n$. Note that we may always find such bases. Suppose now that $\pi(\Gamma_1) = \pi(\Gamma_2) \iff q_{A_2} = q_{A_1B}$. Then we must immediately have $A_2^{\mathsf{T}}A_2 = B^{\mathsf{T}}A_1^{\mathsf{T}}A_1B$, and so letting $A_1' := A_1B$ we see that we are in exactly the same situation (6.1) as when considering injectivity for p, implying that $A_2A_1'^{-1} = C$ for some $C \in O_n(\mathbb{R})$. What does this imply for the lattices? Recall from Prop. 2.1 that $\mathbb{Z}^n$ "eats" elements of $GL_n(\mathbb{Z})$,

$$\Gamma_1 = A_2\mathbb{Z}^n = A_2A_1'^{-1}A_1'\mathbb{Z}^n = A_2A_1'^{-1}A_1\mathbb{Z}^n = A_2A_1'^{-1}\Gamma.$$

Thus the injectivity fails by a factor of $O_n(\mathbb{R})$ and so through Theorem 3.2 we get a bijection by sending from tori instead;

$$\begin{aligned} \overline{\pi} : \left({GL_n(\mathbb{R})}\big/{GL_n(\mathbb{Z})}\right)\Big/{O_n(\mathbb{R})} &\longrightarrow {S_n^+(\mathbb{R})}\big/{GL_n(\mathbb{Z})} \\ T_\Gamma^n &\longmapsto \overline{\pi}(T_\Gamma^n) = [q_A], \text{ where } A \text{ is some basis of } T_\Gamma^n. \end{aligned}$$

[1] All real quadratic forms have a unique associated symmetric matrix.

6.2 Poisson summation and quadratic forms

The set of eigenvalues of the Laplace-Beltrami operator Δ of a flat torus $T^n_\Gamma = \left(\mathbb{R}^n/\Gamma, g/\Gamma\right)$ is given by $\left\{4\pi^2 \|y\|^2 : y \in \Gamma^*\right\}$. Recall Corollary 4.5 and Corollary 4.7; these results simplify the analysis of the Δ-spectrum by allowing us to consider the length spectrum $\left\{\|\gamma\|^2 : \gamma \in \Gamma\right\}$ of the lattice Γ instead. Now, any such γ can be written $\gamma = Ax$, where A is a basis for Γ and $x \in \mathbb{Z}^n$. Therefore $\|\gamma\|^2 = x^\mathsf{T} A^\mathsf{T} A x = q_A(x)$, and so it holds that the length spectrum is precisely $\mathrm{Spec}(q_A) := \{q_A(x) : x \in \mathbb{Z}^n\}$, for some quadratic form $q_A \in [q_A]$. It does not matter from which equivalence class we take the quadratic form: any other basis of Γ can be written AB for some $B \in GL_n(\mathbb{Z})$, and so $\mathrm{Spec}(q_{AB}) = \mathrm{Spec}(q_A)$ since $\|\gamma\|^2 = q_A(x) = q_{AB}(x')$ for some $x, x' \in \mathbb{Z}^n$ not necessarily equal.

It is then clear that two tori, respectively represented by the equivalence classes $[q_A]$ and $[q_{A'}]$ of quadratic forms, are isospectral if and only if $\mathrm{Spec}(q_A) = \mathrm{Spec}(q_{A'})$, for some $q_A \in [q_A]$ and $q_{A'} \in [q_{A'}]$. In addition we can talk about the length spectrum of a quadratic form equivalence class without there being any confusion as to what is meant.

6.3 Low-dimensional and rectangular flat tori

Let us investigate one dimension first, it will get progressively more difficult. We are now aware that the spectrum $\{\|\gamma\|^2 : \gamma \in \Gamma\}$ determines the lengths of the lattice associated to a flat torus. In one dimension therefore, where length is the only geometry, we would expect spectrometry.

Proposition 6.1.
One-dimensional flat tori are spectrometric.

Proof. In one dimension a lattice is simply equal to $a\mathbb{Z}$ for some $a \in \mathbb{R}$. Let the a priori distinct tori $\mathbb{R}/a\mathbb{Z}$ and $\mathbb{R}/a'\mathbb{Z}$ be isospectral, meaning that $\{|az|^2 : z \in \mathbb{Z}\} = \{|a'z|^2 : z \in \mathbb{Z}\}$. Then

$$a^2 = (z'a')^2 \text{ and } a'^2 = (za)^2, \text{ for } z, z' \in \mathbb{Z}.$$

Thus $|z| = 1/|z'|$ which implies that $z' = \pm z = \pm 1$. We observe that $a\mathbb{Z}$ is the same lattice as $a'\mathbb{Z}$, whence $\mathbb{R}/a\mathbb{Z}$ and $\mathbb{R}/a'\mathbb{Z}$ are isometric. □

For two dimensions the result is more tricky; the additional degree of freedom introduces so much added complexity to the lattice as an algebraic object that we must develop some new concepts before being able to prove spectrometry.

Being that we consider forms inside an equivalence class we might start thinking about whether there is a particularly simple representative in a given class. It is a reasonable speculation, so reasonable in fact that the answer is a number theoretic concept going back to Lagrange[15] called *reduction* of positive definite forms. Details on the following discussion is found in Appendix C.

To a quadratic form $q(x) = x^\mathsf{T} Ax$ there is an associated symmetric bilinear form $\widetilde{q}(x,y) = x^\mathsf{T} Ay$, where $x, y \in \mathbb{Z}^n$. A **primitive set of vectors of a lattice** $\Lambda \subset \mathbb{R}^n$ is a set of vectors $\{u_1, \ldots, u_k\}$ $(k \leq n)$ of the lattice Λ such that if a vector $u \in \mathrm{Span}_\mathbb{R}\{u_1, \ldots, u_k\}$ is also a lattice vector $(u \in \Lambda)$, then u must necessarily be an *integer* linear combination

$$u = \alpha_1 u_1 + \cdots + \alpha_k u_k, \text{ for } \alpha_1, \ldots, \alpha_k \in \mathbb{Z}.$$

Intuitively, one can view a primitive set of lattice vectors as an optimal "sub-basis" of the lattice, i.e. a basis of shortest vectors for some dimension(s) of the lattice.

Let $\{v_1, \ldots, v_{k-1}\}$, for $k-1 < n$, be a primitive set of independent vectors of $\mathbb{Z}^n$. Let us then define the following subset of $\mathbb{Z}^n$

$$P(v_1, \ldots, v_{k-1}, +) := \{v \in \mathbb{Z}^n : \{v_1, \ldots, v_{k-1}, v\} \\ \text{is a primitive set of independent vectors}\}, \tag{C.2}$$

such that when $k = 1$, we have $P(+) = \{\text{all primitive vectors of } \mathbb{Z}^n\}$. We then say that the positive definite quadratic form $q \in S_n^+(\mathbb{R})$ is **reduced in the sense of Minkowski** (or simply **reduced**) with respect to the basis $\mathcal{V} := (v_1 v_2 \ldots v_n) \subset \mathbb{Z}^{n\times n}$ for $\mathbb{Z}^n$ if for any $k = 1, \ldots, n$,

(i) $v_k \in P(v_1, \ldots, v_{k-1}, +)$,
(ii) $q(v_k) = \min\{q(x) : x \in P(v_1, \ldots, v_{k-1}, +)\}$,
(iii) $\widetilde{q}(v_k, v_{k-1}) \geq 0$.

Such a reduction can always be found for some basis $\mathcal{V}$ of $\mathbb{Z}^n$, we show this in Appendix C. Being a basis, we can find a matrix A transforming $\mathcal{V}$ to the standard basis $\mathcal{E}$. Any such basis transformation matrix A must from linear algebra theory be a matrix $A \in GL_n(\mathbb{Z})$. Note then that $\mathcal{V} = \mathcal{E}A$, which means precisely that the forms $q \circ \mathcal{V}$ and q are equivalent. Moreover, it is not hard to show that $q \circ \mathcal{V}$ by its construction must be reduced with respect to the standard basis $\mathcal{E}$. Hence there is a form in every equivalence class of $S_n^+(\mathbb{R}) \big/ GL_n(\mathbb{Z})$ which is reduced with respect to the standard basis. The *representative* of every class has been found.

Note that it is enough to check the primitive vectors $\{v\}$ to find the minima $q(e_k)$ at each stage $k = 1, \ldots, n$, since $q(v) \leq q(\alpha v) = \alpha^2 q(v)$ for all $\alpha > 0$.

With $\mathcal{E}$ in place of $\mathcal{V}$, let $\lambda_k = q(e_k)$ for every $k = 1, \ldots, n$. We know by (ii) that

$$\lambda_1 \leq \lambda_2 \leq \ldots \lambda_n.$$

Moreover, $\lambda_1 = q(e_1) \leq q(x)$ for all $x \in \mathbb{Z}^n \setminus \{0\}$, which means that isospectrality of two flat tori must give us that $\lambda_1 = q(e_1)$ is equal to $\lambda_1' = q'(e_1)$, where q and q' are the corresponding forms. Can we say the same for the other basis vectors e_k with $k > 1$? For all $k = 1, \ldots, n$, we have for any $x' \in P(e_1, \ldots, e_{k-1}, +)$ and some $x \in \mathbb{Z}^n$ that

$$q(x) = q'(x')$$

from isospectrality alone. Then the question becomes whether $x \in P(e_1, \ldots, e_{k-1}, +)$ as well; if yes, then we are done since it is clear that the respective minima over this set must be the same. We have $x' = Cx$ for some $C \in O_n(\mathbb{R})$, and as such we can write $Cx \in P(e_1, \ldots, e_{k-1}, +)$. This means precisely that the set $\{e_1, \ldots, e_{k-1}, Cx\}$

is primitive, i.e. $\sum_i \alpha_i e_i + \alpha_k Cx \in \mathbb{Z}^n$ implies $\alpha_1, \ldots, \alpha_k \in \mathbb{Z}$. Given the *symmetric* matrix representations of q and q' as A and A', we have

$$C = AA'^{-1} \tag{6.2}$$

due to $\|Ax\| = \|A'x'\|$. For a criterion showing that $\{e_1, \ldots, e_{k-1}, x\}$ is primitive as well, we must take $\alpha_1, \ldots, \alpha_k \in \mathbb{R}$ and suppose $\sum_i \alpha_i e_i + \alpha_k x \in \mathbb{Z}^n$. Applying C gives

$$\sum_i \alpha_i Ce_i + \alpha_k Cx \in C\mathbb{Z}^n,$$

which only allows for invocation of primality of $\{e_1, \ldots, e_{k-1}, Cx\}$ if it holds that $C\mathbb{Z}^n \subset \mathbb{Z}^n$, i.e. $Ce_i = \beta_i e_j$ for $\beta_i \in \mathbb{Z}$ and not necessarily equal $i, j = 1, 2, \ldots, n$.

Successive minima equality criterion

Isospectrality of $q(x) = x^\mathsf{T} Ax$ and $q'(x) = x^\mathsf{T} A'x$ implies for all $k = 1, \ldots, n$ that

$$\lambda_k = q(e_k) = q'(e_k) = \lambda'_k, \tag{6.3}$$

if $AA'^{-1}\mathbb{Z}^n \subset \mathbb{Z}^n$.

Nevertheless, it always holds that $\lambda_2 = \lambda'_2$. For a proof of this fact, see [8]. The result (6.3) is quite powerful. It gives us a consequence immediately.

Theorem 6.2 (Rectangular tori are spectrometric)**.**
A pair of rectangular tori T^n_Γ whose lattices are given by the type $\Gamma = D\mathbb{Z}^n$, where $D = diag(d_1, \ldots, d_n)$ is a diagonal matrix, are spectrometric regardless of dimension if each squared entry of one matrix is an integer multiple of the corresponding squared entry of the other.

Proof. Let the two a priori distinct tori T^n_Γ and $T^n_{\Gamma'}$ be rectangular as $\Gamma = D\mathbb{Z}^n$ and $\Gamma' = D'\mathbb{Z}^n$. Then, as the multiplication of diagonal matrices with each other is always another diagonal matrix, their representative quadratic forms have matrices which are respectively $\mathrm{diag}(d_1^2, \ldots, d_n^2)$ and $\mathrm{diag}(d_1'^2, \ldots, d_n'^2)$.

Suppose the two tori are isospectral. By the assumption, we have $d_i^2/d_i'^2 \in \mathbb{Z}$ for all $i = 1, 2, \ldots, n$. We may thus invoke criterion (6.3), getting

$$\lambda_j = q(e_j) = d_j \text{ and } \lambda'_j = q'(e_j) = d'_j \text{ for all } j = 1, \ldots, n.$$

It is clear to see that the above implies that $q = q'$. Thus T^n_Γ and $T^n_{\Gamma'}$ are isometric. □

Moreover, we are ready to prove the two-dimensional case.

Proposition 6.3.
Two-dimensional flat tori are spectrometric.

Proof. Take two arbitrary flat tori T^2_Γ and $T^2_{\Gamma'}$ and consider their respective quadratic forms q and q'. Suppose they are isospectral, that $q(e_1) = q'(e_1)$ and

$q(e_2) = q'(e_2)$. Since the matrices of the forms are symmetric we have that

$$q(x) = q(x_1e_1 + x_2e_2) = x_1^2 q(e_1) + 2x_1x_2\widehat{q}(e_1, e_2) + x_2^2 q(e_2)$$

which means that showing $\widehat{q}(e_1, e_2) = \widehat{q}'(e_1, e_2)$ is all we have left to do. By Corollary 4.6 we know that the volume of (2.2) given by

$$\mathrm{Vol}(T^n_\Gamma) = \det(\Gamma) = \sqrt{\det(q)}$$

is a spectral invariant. The volume in the case of 2 dimensions is given by $\det(q) = q(e_1)q(e_2) - \widehat{q}(e_1, e_2)^2$. Therefore, since $\det(q) = \det(q')$, it is clear that $\widehat{q}(e_1, e_2) = \widehat{q}'(e_1, e_2)$ after noting that $\widehat{q}(e_1, e_2), \widehat{q}'(e_1, e_2) \geq 0$ by (iii) of the Minkowski reduction.

□

We have seen that the addition of dimensionality complicates the flat torus in a way that reduces the influence its eigenvalues has on its shape. We had to get our hands quite dirty only stepping from dimension 1 to dimension 2. It is hard to gauge exactly in which dimensions it breaks down, indeed we saw in Chapter 5 exactly how long it took the mathematical community to figure out the answer. Nevertheless, in three dimensions spectrometry still holds.

6.4 The case of three dimensions

Let us give the premise and a (very) basic summary of Schiemann's proof [21]. First we recall

$$\overline{\pi} : \left(GL_n(\mathbb{R}) \Big/ GL_n(\mathbb{Z})\right) \Big/ O_n(\mathbb{R}) \longrightarrow S_n^+(\mathbb{R}) \Big/ GL_n(\mathbb{Z})$$
$$T^n_\Gamma \longmapsto \overline{\pi}(T^n_\Gamma) = [q_A], \text{ where } A \text{ is some basis of } T^n_\Gamma,$$

and return to considering these classes of positive definite quadratic forms.

According to [26], the representation problem is the oldest problem relating to binary quadratic forms[2].

Representation problem

Given $t \in \mathbb{R}^+$ and a positive definite quadratic form q, in how many ways can the equation

$$q(x) = t, \ x \in \mathbb{Z}^n$$

be solved?

The answer is called **representation number** of t by q and it is denoted by

$$A(q, t) = \#\{x \in \mathbb{Z}^n : q(x) = t\}.$$

One could instead of $\mathbb{Z}^n$ consider $\mathbb{R}^n$ or any other field, but $\mathbb{Z}^n$ is the correct choice when relating to flat tori. As an example consider $q(x, y) = x^2+y^2$. Here $A(q, 3) = 0$.

[2]So one would assume to quadratic forms in general.

The representation number of a quadratic form equivalence class is simply the same as that of any of its representatives, inherited by the equivalence relation. From here the connection to the spectrum $\mathrm{Spec}(q) = \{q(x) : x \in \mathbb{Z}^n\}$ is clear: if the representation numbers are known then we can construct the spectrum, and vice versa if the spectrum is known then we know the representation numbers of interest (of interest meaning the ones we can get from the domain of q). Thus

Proposition 6.4.
Two n-dimensional flat tori are isospectral if and only if the representation numbers of $\mathbb{Z}^n$ by their corresponding quadratic form classes coincide. More precisely if $A(q,t) = A(q',t)$ for all $t \in \mathbb{R}$, where q, q' are respective representatives of classes associated to each torus.

holds.

Now we have fully described the equivalence between the analytic geometric problem and the number theoretic problem. Let us summarise; given some dimension n, a pair of flat tori are always spectrometric if and only if any two positive definite quadratic forms are determined up to integral equivalence by their set of representation numbers. It is in this second number theoretic framework that Schiemann's article takes place. Let us briefly describe the general approach taken.

Theorem 6.5.
Ternary positive definite quadratic forms are determined up to integral equivalence by their set of representation numbers. This means that three-dimensional flat tori are spectrometric.

Idea of proof. First, Schiemann notes that n-dimensional positive definite quadratic forms are embedded in $\mathbb{R}^{n(n+1)/2}$ due to their coefficients. Then he takes a particularly simple representative of each class, called Seeber-Eisenstein reduced forms, which exist in a particular convex cone V as a subset of $\mathbb{R}^6$. These constitute a further reduction from the Minkowski reduced forms and the cone V is their fundamental domain. Then he considers successively minimal vectors so that equal representation numbers gives him $f(x_i) = g(x_i)$ for these successively minimal $x_1, x_2, \ldots$. Lastly, invoking a lot of topology and associated computations, Schiemann is able to find a bound $b(f)$ of a form f such that if the two forms f, g has

$$A(f,t) = A(g,t) \quad \text{for all } t \leq b(f) \tag{6.4}$$

then $f \sim_{\mathbb{Z}} g$. Interestingly, this is enough to answer the theorem statement in the affirmative, meaning that (6.4) is always satisfied for any pair of Seeber-Eisenstein reduced positive definite ternary quadratic forms. □

Bibliography

[1] R.J. Baxter. *Exactly solved models in statistical mechanics*. Academic Press Inc., 1982.

[2] W. Boothby. *An Introduction to Differentiable Manifolds and Riemannian Geometry*. Gulf Professional Publishing, 2003.

[3] P. Buser. *Geometry and Spectra of Compact Riemann Surfaces*. Modern Birkhäuser Classics, 2010.

[4] I. Chavel. *Eigenvalues in Riemannian Geometry*. Academic Press, 1984.

[5] T. Coates. The tensor product of vector spaces. `http://www.math.harvard.edu/archive/25b_spring_05/tensor.pdf`. Accessed: 2019-06-18.

[6] J.H. Conway. *The Sensual (Quadratic) Form*. Mathematical Association of America, 1997.

[7] J.H. Conway and N.J.A. Sloane. Four-dimensional lattices with the same theta series. *International Mathematics Research Notices*, 4:93–96, 1992.

[8] M. Craioveanu, M. Puta, and T. Rassias. *Old and New Aspects in Spectral Geometry*. Kluwer Academic Publishers, 2001.

[9] M. do Carmo. *Riemannian Geometry*. Springer-Verlag New York, 1992.

[10] G. Hein and J.M. Cervino. The Conway-Sloane tetralattice pairs are non-isometric. *Advances in Mathematics*, 228:153–166, 2011.

[11] J. Jost. *Riemannian Geometry and Geometric Analysis*. Springer-Verlag New York, 2011.

[12] Y. Kitaoka. Positive definite quadratic forms with same representation numbers. *Archiv der Mathematik*, 28:495–497, 1977.

[13] M. Kneser. Lineare Relationen zwischen Darstellungszahlen quadratischer Formen. *Mathematische Annalen*, 168:31–39, 1967.

[14] O. Lablée. *Spectral Theory in Riemannian Geometry*. EMS Textbooks in Mathematics, 2015.

[15] J.L. Lagrange. Recherches d'Arithmétique. 1775.

[16] J. Lee. *Introduction to Smooth Manifolds*. Springer-Verlag New York, 2012.

[17] J. Milnor. Eigenvalues of the Laplacian on certain manifolds. *Proceedings of the National Academy of Sciences of the United States of America*, 51(4):542, 1964.

[18] J. Nash. The imbedding problem for Riemannian manifolds. *Annals of Mathematics*, 63:20–63, 1956.

[19] S. Salsa. *Partial Differential Equations in Action - From Modelling to Theory*. Springer-Verlag New York, 2015.

[20] A. Schiemann. Ein Beispiel positiv definiter quadratischer Formen der Dimension 4 mit gleichen Darstellungszahlen. *Archiv der Mathematik*, 54:372–375, 1990.

[21] A. Schiemann. Ternary positive definite quadratic forms are determined by their theta series. *Mathematische Annalen*, 308:507–517, 1997.

[22] C.L. Siegel and C. Komaravolu. *Lectures on the Geometry of Numbers*. Springer-Verlag Berlin Heidelberg, 1989.

[23] M. Spivak. *A Comprehensive Introduction to Differential Geometry*. Publish or Perish, 1999.

[24] H. Urakawa. *Spectral Geometry of the Laplacian: Spectral Analysis and Differential Geometry of the Laplacian*. World Scientific Publishing Company, 2017.

[25] J.R. Weeks. *The shape of space*. Marcel Dekker Inc., 1985.

[26] Wikipedia. Binary quadratic form. `https://en.wikipedia.org/wiki/Binary_quadratic_form#The_representation_problem`. Accessed: 2019-05-20.

[27] E. Witt. Eine Identitat zwischen Modulformen zweiten Grades. *Abh. Math. Sem. Univ. Hamburg*, 14:323–337, 1941.

[28] S. Wolpert, C. Gordon, and D.L. Webb. One cannot hear the shape of a drum. *Bull. Amer. Math. Soc.*, 27:134–138, 1992.

A

Appendix A: Differential geometry preliminaries

First let us recall some basic definitions. More details can be found in [2].

A C^∞**-manifold** (or **smooth manifold**) is a Hausdorff locally Euclidean topological space with a global smooth structure in the sense of a maximal atlas of charts connected to each other by smooth transition maps. Such a manifold can have what is called a boundary, but we will not consider such examples. It can also be **compact** if the underlying topological space is compact. Any compact smooth manifold without boundary is called **closed**, an example being the flat torus.

A mapping π between smooth manifolds M, N is called a **diffeomorphism** if for every point $x \in M$ there is a chart (U, ϕ) around x and a chart (V, ψ) around $\pi(x)$ such that $\pi(U) \subset V$ and $\psi \circ \pi \circ \phi^{-1} : \mathbb{R}^n \to \mathbb{R}^m$ is a diffeomorphism[1]. Recall that a map between Euclidean spaces is a diffeomorphism if it is smooth and bijective with a smooth inverse.

A **Lie group** is a group that is also a differentiable manifold (i.e. the structure is only at least once differentiable, not necessarily smooth) with the property that its group operations are smooth. We shall call a group whose elements are countable with every point an open set (discrete topology) a **discrete group**, it is a zero-dimensional Lie group.

A.1 Smooth quotient manifolds

Given a Lie group G and a C^∞-manifold M then G is said to **act** on M if there is a *diffeomorphism* sending $G \times M \ni (\mathfrak{g}, x) \mapsto \mathfrak{g}.x \in M$ while satisfying

(i) $(e, x) \mapsto x$, where e is the identity of G,

(ii) $\mathfrak{g}_1.(\mathfrak{g}_2.x) = (\mathfrak{g}_1\mathfrak{g}_2).x$, where $\mathfrak{g}_1, \mathfrak{g}_2 \in G$.

We can fix $\mathfrak{g} \in G$ and consider the map $\mathfrak{g}. : M \to M$. By (ii) we first see that $(\mathfrak{g}.)^{-1} = \mathfrak{g}^{-1}.$ and thus the map is bijective since for all $y \in M$ there exists a unique $x = \mathfrak{g}^{-1}.y$ such that by (i) $y = \mathfrak{g}.x$. This means in particular that $\mathfrak{g}.$ is an open map sending open sets to open sets, by virtue of it being a diffeomorphism.

The set $Gx = \{\mathfrak{g}.x : \mathfrak{g} \in G\}$ is called the **orbit** of x. The **orbit space** ${}^{M}\!/_{G} := \{Gx : x \in M\}$ is a quotient space under the equivalence relation given by $x \sim y$ IFF $x = \mathfrak{g}.y$ for some $\mathfrak{g} \in G$. The surjective map

$$\pi : M \to {}^{M}\!/_{G} \tag{A.1}$$

[1] The same definition is used regardless of the property of π, for instance π solely smooth.

is called the **natural projection** of M onto M/G.

The **quotient topology** is defined in such a way as to make the natural projection π continuous, that is $P \subset M/G$ is open if[2] $\pi^{-1}(P)$ is open. On the other hand if we take $U \subset M$ open and if we fix $\mathfrak{g} \in G$, then since $\mathfrak{g}.$ is an open map the set $\mathfrak{g}U := \{\mathfrak{g}.x : x \in U\}$ is open. Moreover the set $GU := \bigcup_{\mathfrak{g}\in G} \mathfrak{g}U$, being the union of open sets, if thus open as well. This means that the natural projection π is in fact open. Indeed $GU = \bigcup_{x\in U} Gx$ and thus $GU = \pi^{-1}(\pi(U))$ which means by continuity of π that $\pi(U)$ is open.

If we want M/G to be Hausdorff, what must we require of our topology on M?

Lemma A.1.
M/G is Hausdorff if $E = \{(x, y) : x \sim y\} \subset M \times M$ is closed.

Proof. Let $x, y \in M$ and suppose $\pi(x) \neq \pi(y)$ so that $(x, y) \notin E$. Then for some open subset $U \times V \subset M \times M$ we must have $(x, y) \in U \times V$, and we can take it small enough so that no point of $U \times V$ is in E. But this means precisely that $\pi(U)$ has no elements in common with $\pi(V)$. Moreover, since we established that π is open, they are also open sets. □

It turns out that we can get M/G to be Hausdorff by restricting our group action instead. The action of G on M is called **free** if $\mathfrak{g}.x = x$ for all $x \in M$ implies $\mathfrak{g} = e$. The action is called **proper** if the following two conditions are satisfied

$$\begin{aligned} &\text{(i)} && \text{There is a neighbourhood } U \subset M \text{ of every } x \in M \text{ making the set} \\ &&& \{\mathfrak{g} \in G : \mathfrak{g}U \cap U \neq \emptyset\} \text{ finite,} \\ &\text{(ii)} && \text{If } Gx \neq Gy \text{ then there are respective neighbourhoods } U, V \subset M \text{ of} \\ &&& x, y \text{ such that their intersection } \mathfrak{g}U \cap V = \emptyset \text{ for all } \mathfrak{g} \in G. \end{aligned} \tag{A.2}$$

This can be shown to be equivalent to the property that for all compact $K \subset M$ the set $\{\mathfrak{g} \in G : \mathfrak{g}K \cap K \neq \emptyset\}$ is precompact in G. Intuitively a group action is proper if "very little" of G sends compact sets of M to themselves.

Item (ii) gives us that M/G is Hausdorff. Indeed, the set $E = \{(x, y) : x \sim y\}$ is closed if and only if $E^c = \{(x, y) : x \nsim y\}$ is open, which happens when around every point we can find an open neighbourhood contained in E^c. But if $Gx \neq Gy$ then by (ii) the neighbourhood $U \times V$ contains (x, y) and no element (a, b) therein can have $a \sim b$ since that would imply $\mathfrak{g}U \cap V \neq \emptyset$ for some $\mathfrak{g} \in G$.

The subset of all group elements which by the action leaves a point $x \in M$ unperturbed is called the **isotropy group** $G_x := \{\mathfrak{g} \in G : \mathfrak{g}.x = x\}$ of x and it is a subgroup of G. Its properties are also affected if our group action is proper.

Lemma A.2.
The isotropy groups of a proper action are all finite. Moreover, for every point

[2] Since π is bijective, every set in M can be written as $\pi^{-1}(P)$ for some set $P \subset M/G$.

$x \in M$ there is a neighbourhood $W \subset M$ of x such that

$$\begin{cases} \mathfrak{g} \notin G_x \implies \mathfrak{g}W \cap W = \emptyset, \\ \mathfrak{g} \in G_x \implies \mathfrak{g}W = W. \end{cases} \tag{A.3}$$

Proof. Take any $x \in M$, then since the action is proper we get a neighbourhood U such that $\{\mathfrak{g} \in G : \mathfrak{g}U \cap U \neq \emptyset\}$ is finite. It is easy to see that its isotropy group is finite: pick $\mathfrak{g} \in G_x$, then $x \in U$ and $x \in \mathfrak{g}U$ implying that $\mathfrak{g} \in \{\mathfrak{g} \in G : \mathfrak{g}U \cap U \neq \emptyset\}$, which is finite.

The rest is more tricky. First note that all $\mathfrak{g} \in \{\mathfrak{g} \in G : \mathfrak{g}U \cap U \neq \emptyset\}$ are either in G_x or $G \setminus G_x$. By our hypothesis we may enumerate elements in $G \setminus G_x \cap \{\mathfrak{g} \in G : \mathfrak{g}U \cap U \neq \emptyset\} = \{\mathfrak{g}_1, \ldots, \mathfrak{g}_N\}$. As M is Hausdorff we may pick neighbourhoods U_i of x and V_i of $\mathfrak{g}_i.x$ so that $U_i \cap V_i = \emptyset$. Set

$$W' = U \cap U_1 \cap \cdots \cap U_N \cap \mathfrak{g}_1^{-1}V_1 \cap \cdots \cap \mathfrak{g}_N^{-1}V_N.$$

Take then $\mathfrak{g} \in G \setminus G_x$. If $\mathfrak{g} \neq \mathfrak{g}_k$ for any k then $\mathfrak{g}$ is not in $\{\mathfrak{g} \in G : \mathfrak{g}U \cap U \neq \emptyset\}$ so thus $\mathfrak{g}U \cap U = \emptyset$. On the other hand if $\mathfrak{g} = \mathfrak{g}_k$ for some k, then $\mathfrak{g}\mathfrak{g}_k^{-1}V_k \cap U_k = V_k \cap U_k = \emptyset$. Therefore so long as $\mathfrak{g} \in G \setminus G_x$ it holds that $\mathfrak{g}W' \cap W' = \emptyset$.

The final stroke is taking $W = \bigcap_{\mathfrak{g} \in G_x} \mathfrak{g}W'$. Indeed if $\mathfrak{g}' \in G_x$ then

$$\mathfrak{g}'W = \bigcap_{\mathfrak{g} \in G_x} \mathfrak{g}'\mathfrak{g}W' \overset{group}{=} W'$$

while if $\mathfrak{g}' \notin G_x$ then

$$\mathfrak{g}'W \cap W = \bigcap_{\mathfrak{g} \in G_x} \mathfrak{g}(\mathfrak{g}'W' \cap W') = \emptyset.$$

□

With this last lemma we are ready to prove that there is a unique smooth structure on a discrete quotient manifold.

Theorem A.3 (Discrete quotient manifold theorem)**.**
Whenever G is a discrete group whose action on the C^∞-manifold M is free and proper, there is a unique smooth structure of M/G that together with the quotient topology makes it a C^∞-manifold. In more detail the structure is such that each point $p \in M/G$ is inside a connected neighbourhood $P \subset M/G$ whose projection preimage $\pi^{-1}(P) = \bigcup W_\alpha$, where the W_α are open and connected and when used to restrict the projection as $\pi|_{W_\alpha}$ they make it a diffeomorphism onto P.

Proof. By item (ii) of the proper action (A.2) we get that M/G is Hausdorff. An atlas of a manifold is countable if and only if we can find a countable "base" of open sets for the manifold (i.e. every open set of the manifold can be written as the union of some subfamily $\mathcal{F}$ of this base). This property is true for M since M is a smooth manifold. Since π is continuous, taking $P \subset M/G$ open,

we get $\pi^{-1}(P) = \bigcup_{U_\alpha \in \mathcal{F}} U_\alpha$ for open sets U_α. Since π is an open map it holds that $P = \bigcup_{U_\alpha \in \mathcal{F}} \pi(U_\alpha)$ is a union of a subfamily of open sets.

Next we invoke Lemma A.2 to find around every point $x \in M$ a neighbourhood W satisfying (A.3), we may without loss of generality choose it to be a connected neighbourhood with an associated chart map $\phi : W \to \phi(W) \subset \mathbb{R}^n$. Consider now the restriction of the projection π to W. Since the action is free, every $G_x = \{e\}$, so the only way that $\mathfrak{g}W$ can equal W is if $\mathfrak{g} = e$. This is enough to guarantee that $\pi|_W$ is one-to-one onto its image $\pi(W)$. Indeed, if $\pi(w) = p = \pi(w')$ for $W \ni w' \neq w \in W$, we have $w' = \mathfrak{g}.w$ for some $\mathfrak{g} \in G$ and therefore $w' \in \mathfrak{g}W$, which forces $\mathfrak{g} = e$. Therefore $\pi|_W \colon W \to \pi(W)$ is a homeomorphism. This implies that

$$\widehat{\phi} := \phi \circ (\pi|_W)^{-1} : \pi(W) \to \mathbb{R}^n$$

is a homeomorphism as well, and we take it as our chart map. $M\big/_G$ is therefore locally Euclidean, since every $p \in M\big/_G$ is the image of some $x \in M$, which has a W as described above, and thus $p \in \pi(W)$. All the above amounts to saying that $M\big/_G$ is a topological manifold.

We want the structure to be smooth in order to prove the theorem. Label $P_\alpha = \pi(W_\alpha)$ for some $W_\alpha \subset M$ as described above, then since they are countable $\{P_\alpha, \widehat{\phi}_\alpha\}$ denotes our set of charts. Pick two charts $(P, \widehat{\phi}), (Q, \widehat{\psi}) \in \{P_\alpha, \widehat{\phi}_\alpha\}$ such that P and Q overlap some, also let $U = \pi^{-1}(P), V = \pi^{-1}(Q)$. Since π is not one-to-one we might have $U \cap V = \emptyset$, a problem which is luckily remedied by the fact there must thus be some $\mathfrak{g} \in G$ such that $\mathfrak{g}U \cap V \neq \emptyset$. Thus since $\mathfrak{g}.$ maps M onto itself we can write $\pi = \pi \circ \mathfrak{g}.$, whereby

$$\widehat{\phi} = \phi \circ (\pi|_W \circ \mathfrak{g}.)^{-1} \text{ and } \widehat{\psi} = \psi \circ (\pi|_W)^{-1}.$$

The chart transition map $\widehat{\phi} \circ \left(\widehat{\psi}\right)^{-1} = \phi \circ \mathfrak{g}.^{-1} \circ \psi^{-1}$ is thus a diffeomorphism and the same is then true for $\widehat{\psi} \circ \left(\widehat{\phi}\right)^{-1}$. Hence our atlas of charts defines a smooth structure on $M\big/_G$.

Take $W = U \cap V$ so that $(W, \phi), (W, \psi) \in \{W_\alpha, \phi_\alpha\}$, for $W_\alpha = \pi^{-1}(P_\alpha)$. To show that the smooth structure is unique, recall that the $\pi|_W \colon W \to \pi(W) \subset M\big/_G$ is a diffeomorphism if $\widehat{\phi} \circ \pi \circ \phi^{-1} : \mathbb{R}^n \to \mathbb{R}^n$ is. Since

$$\widehat{\phi} = \phi \circ \mathfrak{g}.^{-1} \circ \psi^{-1} \circ \widehat{\psi}$$

we can see that $\widehat{\phi}$ maps $p \in M\big/_G$ to the *same* point as ϕ does for $x \in M$. Thus $\pi|_W$ is a diffeomorphism and, since $\bigcup_\alpha W_\alpha$ covers M, it means that the natural projection π is locally a diffeomorphism. Hence no other smooth structure is possible on $M\big/_G$. □

We wish to apply this result to the torus, in that way turning it into a C^∞-manifold. Unfortunately, it is quite non-trivial to show that a discrete subgroup G of a Lie group M (like the lattice) acts properly by left translations. We shall

use the following notations for sets $V, U \subset M$; $VU := \{vu : v \in V, u \in U\}$, $V^{-1} := \{v^{-1} : v \in V\}$.

Theorem A.4.
Let M be a Lie group and $G \subset M$ a discrete subgroup. The left translation action $M \ni x \mapsto \mathfrak{g}x \in M$ by $\mathfrak{g} \in G$ is free and proper on M.

Proof. Since the left translation $\mathfrak{g}x = x$ only if $\mathfrak{g} = e$, the action is immediately free. Now we must show that (i) and (ii) of a proper action (A.2) are satisfied.

To this end consider the neighbourhood U of e such that $U \cap G = \{e\}$, which exists by the very definition of G. Let $V_1 \times V_2 \subset \mu^{-1}(U)$ be such that $(e, e) \in V_1 \times V_2$, where $\mu : G \times G \to G$ is multiplication in G. It thus holds that $V_1 V_2 \subset U$ and since U is open so is V_1, V_2. Then take $V_3 = V_1 \cap V_2 \subset U$. For the neighbourhood $V = V_3 \cap V_3^{-1}$ of e it now holds that $VV^{-1} \subset U$.

We now show (i), that $\{\mathfrak{g} \in G : \mathfrak{g}V \cap V \neq \emptyset\}$ is finite. Suppose that we can find a point in the intersection, then for $v_1, v_2 \in V$ and some $\mathfrak{g} \in G$ we have $\mathfrak{g}v_1 = v_2$ which implies $\mathfrak{g} = v_1 v_2^{-1} \in VV^{-1} \subset U \implies \mathfrak{g} = e$, so (i) is most certainly satisfied.

To show (ii) we need to show that if the orbits of two points are not equal then there are neighbourhoods W, W' around the points such that $W \cap GW' = \emptyset$. We may without loss of generality take $x = e$. So suppose for $y \in M$ that $G \neq Gy$, which means that $e \notin Gy$. Since every set in the discrete topology is both open and closed, Gy is closed (as $\pi^{-1}(Gy)$ is in the discrete topology) and therefore $\hat{U} = (Gy)^c \ni e$ is an open neighbourhood of e. We can then find (by the second paragraph of the proof) a possibly smaller neighbourhood $\hat{V}$ of e so that $\hat{V}\hat{V}^{-1} \subset \hat{U}$. Set $W = y\hat{V}$ and $W' = \hat{V}$. For any $\mathfrak{g} \in G$ suppose there is a point $z \in W \cap \mathfrak{g}W' = y\hat{V} \cap \mathfrak{g}\hat{V}$, then we have $y^{-1}z \in \hat{V}$ and $\mathfrak{g}^{-1}z \in \hat{V}$. Thus $\mathfrak{g}^{-1}y = (\mathfrak{g}^{-1}z)(y^{-1}z)^{-1} \in \hat{V}\hat{V}^{-1}$ while we already know $\mathfrak{g}^{-1}y \in Gy$, a contradiction. □

A.2 Tangent spaces, pushforwards and pullbacks

We call a map that exhibits the same properties as the natural projection π (see (A.1)) a **smooth covering map**, its features being surjective, open and locally a diffeomorphism. Recall that being locally a diffeomorphism amounts to saying that each point $p \in {}^{M}\!/_{G}$ has an open neighbourhood $P \subset {}^{M}\!/_{G}$ whose projection preimage $\pi^{-1}(P) = \bigcup W_\alpha$, where the W_α are open and connected and, when used to restrict the projection as $\pi|_{W_\alpha}$ they make it a diffeomorphism onto P. This type of map has a special implication regarding pushforwards of vectors, so let us recall these notions.

Recall that the **tangent space** of a smooth manifold M of dimension n at a point $x \in M$ is defined as[3]

$$T_x M := \left\{ X : C^\infty(x) \xrightarrow{\sim} \mathbb{R} \ s.t.\ X(fg) = g(x)X(f) + f(x)X(g) \right\},$$

[3]The $\sim$ implies the map is linear, in this case $\mathbb{R}$-linear.

where $C^\infty(x)$ is the space of smooth functions on M around the point x. The $\sim$ means that the mapping $C^\infty(x) \xrightarrow{\sim} \mathbb{R}$ is linear in its domain, which in this case happens to be $C^\infty(x)$. We will write Xf for $X(f)$ if there is no confusion as to what is meant. The elements of the tangent space are called **tangent vectors**, one can show that the tangent space is indeed a vector space. One can show, see e.g. [2], that there is a basis $\{\frac{\partial}{\partial x^j}\}$ of T_xM such that each vector $X \in T_xM$ can be written $X = \sum_{j=1}^n X^j \frac{\partial}{\partial x^j} = X^j \frac{\partial}{\partial x^j}$, where $X^j \in \mathbb{R}$. Recall that $x^j = r^j \circ x$ where x is the chart map to $\mathbb{R}^n$ and r^j the jth standard coordinate.

Suppose we are given a smooth map φ between two smooth manifolds M, N. Then we define for every $x \in M$ the **pushforward** or **differential** $\varphi_{*,x}$ of φ at x by

$$\begin{aligned} \varphi_{*,x} : T_xM &\to T_{\varphi(x)}N \\ X &\mapsto \varphi_{*,x}(X) \ s.t. \ \varphi_{*,x}(X)f := X(f \circ \varphi), \end{aligned} \tag{A.4}$$

where $f \in C^\infty(\varphi(x))$. We shall write shorthand $\varphi_{*,x}X$ in place of $\varphi_{*,x}(X)$ whenever appropriate.

Take $X \in T_xM$ and $f \in C^\infty(\varphi(x))$ for $x \in M$. To see that the pushforward is well defined we need to check linearity and the Leibniz rule. These are both easy to check, the Leibniz rule for instance is given by

$$\begin{aligned} \varphi_{*,x}(X)(fg) = X((f \circ \varphi)(g \circ \varphi)) = g(\varphi(x))X(f \circ \varphi) + f(\varphi(x))X(g \circ \varphi) = \\ = g(\varphi(x))\varphi_{*,x}X(f) + f(\varphi(x))\varphi_{*,x}X(g). \end{aligned}$$

Moreover the map is a homomorphism between tangent spaces in the following sense, taking $a, b \in \mathbb{R}$ and $Y \in T_xM$,

$$\begin{aligned} \varphi_{*,x}(aX + bY)f = (aX + bY)(f \circ \varphi) = aX(f \circ \varphi) + bY(f \circ \varphi) = \\ = a\varphi_{*,x}Xf + b\varphi_{*,x}Yf = (a\varphi_{*,x}X + b\varphi_{*,x}Y)f. \end{aligned}$$

Lastly we note that the pushforward commutes with function composition in a way generalising the chain rule of differentials between Euclidean spaces. To see this take L, M, N to be smooth manifolds and $\phi : L \to M$, $\varphi : M \to N$ as smooth maps, then for arbitrary $x \in L$ and $y \in M$, we have $\phi_{*,x} : T_xL \to T_{\phi(x)}M$ and $\varphi_{*,y} : T_yM \to T_{\varphi(y)}N$, while the compositions

$$\begin{aligned} (\varphi \circ \phi)_{*,x} &: T_xL \to T_{\varphi\circ\phi(x)}N, \text{ and} \\ \varphi_{*,\phi(x)} \circ \phi_{*,x} &: T_xL \to T_{\varphi\circ\phi(x)}N. \end{aligned}$$

Now for any $X \in T_xN$ and $h \in C^\infty(\varphi(\phi(x)))$ we have by the definition that

$$\begin{aligned} &(\varphi \circ \phi)_{*,x}(X)h = X(h \circ \varphi \circ \phi), \text{ is equal to} \\ &(\varphi_{*,\phi(x)} \circ \phi_{*,x})(X)h = \varphi_{*,\phi(x)}(\phi_{*,x}(X))h = \phi_{*,x}(X)(h \circ \varphi) = X(h \circ \varphi \circ \phi). \end{aligned}$$

Hence we write

$$(\varphi \circ \phi)_{*,x} = \varphi_{*,\phi(x)} \circ \phi_{*,x}. \tag{A.5}$$

At this point let us investigate an important special case before we end our discussion of pushforward with Lemma A.5. Recall Def. A.4 and take $N = \mathbb{R}^n$. For

every point $p \in \mathbb{R}^n$ we have the identification $X = X^i \frac{\partial}{\partial x_i} \overset{id}{=} (X^1, \dots, X^n)$ given any $X \in T_p\mathbb{R}^n$. This is basically saying that there is a unique vector $v = (X^1, \dots, X^n)$ in $\mathbb{R}^n$ representing every derivation X in any tangent space as $X = \frac{\partial}{\partial v} = v \bullet \nabla$, where ∇ is the gradient of $\mathbb{R}^n$. From this we can construct a special definition for the **differential** of a function f in $C^\infty(M)$ taking values in $\mathbb{R}$, namely for any $x \in M$

$$df(x) : T_xM \ni X \mapsto df(x)X = Xf \in \mathbb{R}. \tag{A.6}$$

Notice that this maps to the 1-dimensional "vector" representing the derivation reached by the usual pushforward $f_{*,x}$. We shall reserve differential to mean this particular map $df(x)$.

Lemma A.5.
If $\varphi : M \to N$ is a smooth covering map from and to smooth manifolds, then $\varphi_{*,x}$ is an isomorphism for every $x \in M$.

Proof. Since vectors only act on functions defined around a point, we have a natural identification of T_xM with T_xU for all $x \in M$ where U is an open neighbourhood of x. Equivalently we may then consider for our pushforward the diffeomorphism $\psi := \varphi|_U$, meaning $\psi_{*,x} = \varphi_{*,x}$ on T_xM. Since ψ is a diffeomorphism, we know it must have an inverse ψ^{-1} satisfying

$$\psi^{-1} \circ \psi = id : U \to U.$$

What does this imply for our pushforward $\psi_{*,x}$?

Well it would be nice if this inverse gave us a corresponding inverse $(\psi_{*,x})^{-1}$ for the pushforward. By what we last showed regarding (A.5), we can immediately see that $(\psi^{-1} \circ \psi)_{*,x} = (\psi^{-1})_{*,\psi(x)} \circ \psi_{*,x} = id_{*,x}$, so the question becomes whether or not $id_{*,x} : T_xM \to T_xM$ is the identity map for tangent vectors. To investigate this we take $X \in T_xM$ and $f \in C^\infty(x)$ and observe that

$$id_{*,x}Xf = X(f \circ id) = Xf.$$

Thus $(\psi^{-1})_{*,\psi(x)} = (\psi_{*,x})^{-1}$ is the inverse to $\psi_{*,x}$ and therefore $\varphi_{*,x} : T_xM \to T_{\varphi(x)}N$ is bijective for all $x \in M$ and so an isomorphism. □

Every tangent space T_xM has a dual called the **cotangent space** given by $T_xM^* := \{\omega : T_xM \xrightarrow{\sim} \mathbb{R}\}$. Every element ω associates to any tangent vector $X \in T_xM$ a real number $\langle \omega, X \rangle$, the set of these cotangent vectors is also a vector space and has a dual basis $\{dx^j\}$ such that $\langle dx^j, \frac{\partial}{\partial x^i} \rangle := \frac{\partial}{\partial x^i} x^j = \delta_i^j$. As an example of an element of the cotangent space (called **covectors**), recall Def. A.6, we have the differential $df(x)$ of a function $f \in C^\infty(M)$ which associates to every vector X a value in $\mathbb{R}$ by $df(x)X = Xf$.

Let L, M, N be smooth manifolds as per usual. Recall that the **pullback** of a smooth map $\varphi : M \to N$ by another smooth map $\phi : L \to M$ is given by the smooth composition $\phi^*\varphi := \varphi \circ \phi : L \to N$.

We can also define the pointwise **pullback** $\varphi^*|_{\pi(x)} = \varphi^*_{\pi(x)}$ of a cotangent vector

$\omega \in T_{\pi(x)}N$ as

$$\begin{aligned} \varphi_y^* &: T_{\pi(x)}N \to T_xM \\ &\omega \mapsto \varphi^*_{\pi(x)}(\omega) \ s.t. \ \langle \varphi^*_{\pi(x)}(\omega), X\rangle := \langle \omega, \varphi_{*,x}(X)\rangle. \end{aligned} \tag{A.7}$$

However note that in contrast to the (pointwise) pushforward it requires φ to be injective and surjective to be well defined. Let us see if we can arrive at a better more general definition.

Without any rigour (for that see [16]) we shall now concern ourselves with **vector fields** and **covector fields** which map a point smoothly to a tangent vector and a cotangent vector respectively. We set

$$\Gamma(TM) = \{\text{“vector fields”}\}, \ \Gamma(TM^*) = \{\text{“covector fields”}\}.$$

Note that it is impossible to find a global basis for these sets (they are not vector spaces), yet on a chart the basis for the tangent (cotangent) space extends to a basis for the local set of vector (covector) fields.

A (r,s)**-tensor field** T on a smooth manifold M is a C^∞-multilinear map

$$T : \underbrace{\Gamma(TM^*) \times \cdots \times \Gamma(TM^*)}_{\#r} \times \underbrace{\Gamma(TM) \times \cdots \times \Gamma(TM)}_{\#s} \longrightarrow C^\infty(M). \tag{A.8}$$

It is possible to identify vector fields with $(1,0)$-tensor fields, while we see that covector fields are already defined as $(0,1)$-tensor fields. The tensor product (see [5] for more details) of a (r,s)-tensor field T with a (p,q)-tensor field S produces a $(r+p, s+q)$-tensor field $R = T \otimes S$ defined by

$$R(\omega_1, \ldots, \omega_{r+p}, X_1, \ldots, X_{s+q}) = T(\omega_1, \ldots, \omega_r, X_1, \ldots, X_s) S(\omega_{r+1}, \ldots, \omega_{r+p}, X_{s+1}, \ldots, X_{s+q}).$$

By virtue of this definition there is an isomorphism called the universal property that identifies each (r,s)-tensor field T with an element in the corresponding tensor product space as

$$\begin{aligned} T &\overset{id}{=} \omega_1 \otimes \cdots \otimes \omega_r \otimes X_1 \otimes \cdots \otimes X_s \in \\ &\in \Gamma(TM^*) \otimes \cdots \otimes \Gamma(TM^*) \otimes \Gamma(TM) \otimes \cdots \otimes \Gamma(TM). \end{aligned} \tag{A.9}$$

With the tensor field definition (A.8) in hand we can define the Riemannian metric, for more details on tensor fields consult for instance [16].

Now, the pullback (A.7) makes a much nicer appearance applied to $(0,s)$-tensor fields over the whole space (i.e. not pointwise). Given a smooth map between smooth manifolds $\varphi : M \to N$ and a $(0,s)$-tensor field T on N we can define the **pullback** φ^*T as the $(0,s)$-tensor field on M satisfying for every point $x \in M$

$$(\varphi^*T)_x(X_1, \ldots, X_s) := T_{\varphi(x)}(\varphi_{*,x}X_1, \ldots, \varphi_{*,x}X_s), \tag{A.10}$$

where $X_1, \ldots, X_s \in T_xM$. This always exists and is well defined.

Ironically, we can not analogously define a general pushforward applied to $(r,0)$-tensor fields, this requires the underlying map to be a diffeomorphism (similar to the breakdown of pointwise pullback!).

A.3 Constructing the Laplace operator on a Riemannian manifold

What does it mean to take a derivative on a Riemannian manifold (M, g)? There are a multitude of answers and they are arguably all nontrivial. We are in the end looking to extend the Laplacian Δ to a Riemannian manifold. This operator will be a composition of the extended divergence and gradient, completely analogous in the end to the Euclidean case.

Let us start by working towards the gradient before the divergence, since a smooth function is something easier to deal with than a smooth vector field.

Intuitively we are looking for an operator grad : $C^\infty(M) \to \Gamma(TM)$. The only notion of differentiation we have at this point is the differential, recall Def. A.6, of a function. So let us use this differential in its "field form" (recall our naive extension of covectors to covector fields). Given any function $f \in C^\infty(M)$ its differential is given by the covector field

$$df : M \ni x \mapsto df(x) \in T_x M^*.$$

Is there any way to turn this into a vector field? Indeed there is, we must simply remind ourselves of the musical isomorphisms, specifically

$$\sharp : \omega \mapsto \omega^\sharp \in \Gamma(TM) \text{ such that } g(\omega^\sharp, Y) = \langle \omega, Y \rangle, \text{ where } \omega \in \Gamma(TM^*).$$

Likewise $(df)^\sharp$ is a *vector field* and suffices for our definition of gradient:

$$\begin{aligned} \text{grad} : C^\infty(M) &\to \Gamma(TM) \\ f &\mapsto \text{grad} f = (df)^\sharp. \end{aligned} \tag{A.11}$$

By definition of musical isomorphism, the gradient forms a specific "angle" with any vector field $Y \in \Gamma(TM)$. We have

$$g((df)^\sharp, Y) = \langle df, Y \rangle = Yf.$$

This property gives us the ability to express the gradient in local coordinates as

$$\text{grad} f = g^{ij} \frac{\partial f}{\partial x^i} \frac{\partial}{\partial x^j}.$$

Thus in an affine space this reduces to our memory of the good old Euclidean gradient: $\text{grad} f = \frac{\partial f}{\partial x^i} e_i$. It is not too hard from here to deduce, taking $f, g \in C^\infty(M)$ and $a \in \mathbb{R}$, the properties,

(i) $\text{grad}(fg) = \text{grad}(f)g + f\text{grad}(g)$,
(ii) $\text{grad}(af + g) = a\text{grad}(f) + \text{grad}(g)$.

Next to consider is the divergence. We want a map taking vector fields in $\Gamma(TM)$ to functions in $C^\infty(M)$. For this we actually need a new notion of derivative called

the **connection** or **covariant derivative**, denoted by ∇. It is defined as follows,

$$\begin{aligned}\nabla : \Gamma(TM) \times \Gamma(TM) &\to \Gamma(TM)\\ (X, Y) &\longmapsto \nabla_X Y \text{ obeying}\end{aligned} \tag{A.12}$$

$$\begin{aligned}
&(i) \quad \nabla_X f = Xf, \text{ for all } f \in C^\infty(M),\\
&(ii) \quad \nabla_{fX+Y} Z = f\nabla_X Z + \nabla_Y Z, \text{ for all } f \in C^\infty(M), Z \in \Gamma(TM),\\
&(iii) \quad \nabla_X(aY + Z) = a\nabla_X Y + \nabla_X Z, \text{ for all } a \in \mathbb{R}, Z \in \Gamma(TM),\\
&(iv) \quad \nabla_X(Y \otimes Z) = \nabla_X Y \otimes Z + Y \otimes \nabla_X Z, \text{ for all } Z \in \Gamma(TM).
\end{aligned}$$

This connection gives a way to discuss the rate of change of one vector field with respect to another, in fact the name connection derives from its property of connecting tangent spaces through what is called parallel transport (a discussion we will skip). How much freedom do we have in choosing ∇? Let us investigate in a local chart. Since $\nabla_{\frac{\partial}{\partial x^i}} \frac{\partial}{\partial x^j}$ is a vector field in $\Gamma(TM)$ it must be able to be written as $\nabla_{\frac{\partial}{\partial x^i}} \frac{\partial}{\partial x^j} = \Gamma^k_{ij} \frac{\partial}{\partial x^k}$, for some coefficient functions Γ^k_{ij}. Taking these to be

$$\Gamma^k_{ij} = \frac{1}{2} g^{kl} \left(\frac{\partial}{\partial x^i} g_{jl} + \frac{\partial}{\partial x^j} g_{il} - \frac{\partial}{\partial x^l} g_{ij}\right)$$

gives us the unique so called Levi-Civita connection (this is a standard choice to receive what is called a torsion-free manifold). We will not need to concern ourselves further with this.

Intuitively the divergence of a vector field is a local measure of the flux of said vector field, the flux taking *all* directions around said vector field into account. Can we collect the covariant derivatives $\nabla_Y X$ of a vector field X by any vector field Y into a single object retaining all information? Indeed we can.

We define the **total covariant derivative** of a vector field $X \in \Gamma(TM)$ as a $(1,1)$-tensor field in the following way,

$$\begin{aligned}\nabla : \Gamma(TM) \to\ & \Gamma(TM^*) \otimes \Gamma(TM)\\ X \mapsto \nabla X : \Gamma(TM^*) \times \Gamma(TM) &\to C^\infty(M)\\ (\omega, Y) &\longmapsto \nabla X(\omega, Y) = \langle \omega, \nabla_Y X \rangle.\end{aligned}$$

It is well defined by virtue of the C^∞-linearity (i) of (A.12); $\nabla_{fY+Z} X = f\nabla_Y X + \nabla_Z X$ implies $\nabla X(\omega, fY + Z) = f\nabla X(\omega, Y) + \nabla X(\omega, Z)$.

This total covariant derivative actually contains more information than we need to define the divergence. We are only interested in the sum of its "diagonal" elements. Think of the standard Euclidean divergence $\nabla \cdot X = \frac{\partial X^i}{\partial x^i}$. To this end we define the **trace** $\mathrm{tr} : \Gamma(TM^*) \otimes \Gamma(TM) \to C^\infty(M)$ of a $(1,1)$-tensor field $\omega \otimes X$ to be $\langle \omega, X \rangle$. While this definition seems arbitrary it is in fact well defined since $(1,1)$-tensor fields can be identified with endomorphisms $\{\mathcal{A} : \Gamma(TM) \xrightarrow{\sim} \Gamma(TM)\}$.

Finally we can define the **divergence** $\mathrm{div} : \Gamma(TM) \to C^\infty(M)$ of a vector field X as

$$\mathrm{div} X = \mathrm{tr}(\nabla X). \tag{A.13}$$

Locally it is a bit of an exercise to show that $\mathrm{div}X = \frac{1}{\sqrt{|g|}}\frac{\partial}{\partial x^i}(\sqrt{|g|}X^i)$. Moreover we have for $X, Y \in \Gamma(TM), f \in C^\infty(M)$ and $a \in \mathbb{R}$ that

(i) $\mathrm{div}(fX) = g(\mathrm{grad}f, X) + f\mathrm{div}(X)$,
(ii) $\mathrm{div}(aX + Y) = a\mathrm{div}(X) + \mathrm{div}(Y)$.

Now we are ready to define the **Laplace-Beltrami operator** (also called **Laplacian**) of a function on a Riemannian manifold. Having both (A.11) and (A.13) in mind, it is given as

$$\begin{aligned} \Delta := \mathrm{div} \circ \mathrm{grad} : C^\infty(M) &\to C^\infty(M) \\ f &\longmapsto \Delta f = \mathrm{tr}(\nabla(df)^\sharp). \end{aligned} \tag{A.14}$$

Locally,

$$\Delta f = \frac{1}{\sqrt{|g|}}\frac{\partial}{\partial x^i}(\sqrt{|g|}(\mathrm{grad}f)^i) = \frac{1}{\sqrt{|g|}}\frac{\partial}{\partial x^i}(\sqrt{|g|}g^{ik}\frac{\partial f}{\partial x^k}).$$

It is another nice exercise to use (A.11) and (A.13) to show that we have the following properties given any smooth functions f, g and $a \in \mathbb{R}$:

(i) $\Delta(fg) = \Delta f g + f\Delta g + 2g(\mathrm{grad}(f), \mathrm{grad}(g))$,
(ii) $\Delta(af + g) = a\Delta f + \Delta g$.

B

Appendix B: Spectral theory of compact operators and bilinear forms

For more details the reader is referred to [19].

B.1 A taste of finite dimensions

Consider a matrix $A \in \mathbb{R}^{n\times n}$. Then for $\lambda \in \mathbb{R}$ we look for solutions $x \in \mathbb{R}^n$ to

$$(A - \lambda)x = 0.$$

These solutions, if nontrivial, are called eigenvectors to the eigenvalue λ. This framework is called the *eigenvalue problem in finite dimensions*. What results do we have? Let's start with some definitions.

We denote by $\mathrm{Ker}(A - \lambda)$ the set of eigenvectors to λ. The multiplicity $m(\lambda)$ is given by $\dim(\mathrm{Ker}(A - \lambda))$. The spectrum is denoted as $\mathrm{Spec}(A) = \{\lambda \in \mathbb{R} : (A - \lambda)x = 0\}$ while the resolvent set is $\rho(A) = \mathbb{R} \setminus \sigma(A)$.

We have that A may be diagonalised if and only if there is a basis in $\mathbb{R}^n$ of eigenvectors solving the eigenvalue problem. Suppose the diagonalisation look like $A = Q\Lambda Q^{-1}$. Then the elements of Λ are the eigenvalues and the column vectors of Q are the eigenvectors, therefore

$$AQ = Q\Lambda.$$

Also we see that eigenvectors of different eigenvalues are orthogonal. Note first that $\mathrm{Spec}(A) = \mathrm{Spec}(A^{\mathsf{T}})$, then

$$\lambda_i e_i^{\mathsf{T}} e_j = (Ae_i)^{\mathsf{T}} e_j = e_i^{\mathsf{T}} A^{\mathsf{T}} e_j = \lambda_j e_i^{\mathsf{T}} e_j \implies e_i^{\mathsf{T}} e_j = 0.$$

Lastly if A is symmetric then the basis of eigenvectors can always to taken normalised and we may decompose A in its spectral components as

$$A = TDT^{\mathsf{T}} = \sum_i \lambda_i \left\| v_i \right\|^2 .$$

We can in some sense extend these results when A is an operator between infinite dimensional spaces. First we must generalise certain properties of A.

B.2 Compact and self-adjoint operators in infinite dimensions

Let us take H to be an infinite dimensional Hilbert space. For $L \in B(H) = \{L : H \to H$, linear in H and continuous such that $\|Lu\|_H \leq c\|u\|_H$, for all $u \in H$ and some $c \in \mathbb{R}\}$ consider

$$Lu - \lambda u = (L - \lambda I)u = h,$$

where $h \in H$ and I is the identity map $I : H \ni u \mapsto u \in H$. The operator L is **compact** if the image $L(C)$ of any bounded set $C \subset H$ is precompact in H with respect to the norm topology. Recall that precompact means that the closure $\overline{L(C)}$ is compact. With respect to the inner product of H we call L **self-adjoint** if $\langle Lu, v\rangle = \langle u, Lv\rangle$.

The **resolvent set** of 'perfect' λ is defined as

$$\rho(L) := \{\lambda \in \mathbb{R} : L - \lambda I \text{ is 1-to-1 and onto}\}.$$

For any $\lambda \in \rho(L)$ the operator $(L - \lambda I)^{-1}$ exists and is continuous by the Open mapping theorem.

The **spectrum** is then given by the set of λ which are left over;

$$\sigma(L) := \mathbb{R} \setminus \rho(L).$$

The operator associated to these λ can fail at being nice in several ways.

First, $L - \lambda I$ might not be 1-to-1. This is equivalent to the equation $Lu - \lambda u = 0$ having nontrivial solutions $u \in H$. For such $u \neq 0$ we call $\lambda \in \sigma(L)$ an **eigenvalue** and u a corresponding **eigenvector**. The set of eigenvalues is denoted by the **point spectrum**

$$\sigma_p(L) := \{\lambda \in \mathbb{R} : (L - \lambda I)u = 0, u \neq 0\}.$$

The **eigenspace** of λ is defined as the kernel of $L - \lambda I$, $\mathrm{Ker}(L - \lambda I)$. The **multiplicity** of $\lambda \in \sigma_p$ is then $\dim(\mathrm{Ker}(L - \lambda I))$.

Second, $L - \lambda I$ might pass at being 1-to-1 but $\mathrm{im}(L - \lambda I)$ might not be dense in H, with respect to $\|\bullet\|_H$. This set of λ's is called the **residual spectrum**, denoted by

$$\sigma_r(L) := \{\lambda \in \mathbb{R} : (K - \lambda I)u = 0 \implies u = 0 \text{ and } \overline{\mathrm{im}(L - \lambda I)} \subsetneq H\}.$$

Third, $L - \lambda I$ might pass at being 1-to-1 and having $\mathrm{im}(L - \lambda I)$ dense in H, but $(L - \lambda I)^{-1}$ need not be continuous. Such λ usually appear in a continuum and therefore we denote the **continuous spectrum** by

$$\sigma_c(L) := \{\lambda \in \mathbb{R} : (K - \lambda I)u = 0 \implies u = 0, \overline{\mathrm{im}(L - \lambda I)} = H \text{ and } (L - \lambda I)^{-1} \notin B(H)\}.$$

We have $\sigma = \sigma_p \mathbin{\mathring{\cup}} \sigma_c \mathbin{\mathring{\cup}} \sigma_r$. Let us now state without proof the spectral theorem for compact operators.

Theorem B.1.
Let $K \in B(H)$ be a compact and self-adjoint operator on an infinite-dimensional separable Hilbert space H. Then

(i) $0 \in \sigma(K)$ *and* $\sigma(K) \setminus \{0\} = \sigma_p(K)$,

(ii) H *admits either a finite orthonormal basis of eigenvectors of* K*, or a countably infinite orthonormal basis of eigenvectors of* K,

(iii) in any case the corresponding set of eigenvalues can be arranged in a decreasing sequence $|\lambda_1| \geq |\lambda_2| \geq \dots$*, while in the countably infinite case we also have* $|\lambda_k| \to 0$*. Moreover, each such eigenvalue* $\lambda \in \sigma_p(K)$ *has finite multiplicity.*

B.3 Spectral theorem for bilinear forms

We continue our analysis from Chapter 4.2; knowing that $a(\bullet, \bullet)$ is a symmetric, continuous and weakly coercive bilinear form, while $\{V, H, V^*\}$ is a Hilbert triplet with $V \hookrightarrow^c H$.

First note that there is a unique map $A : V \to V^*$ such that for $f, g \in V$

$$\langle Af, g\rangle_* = a(f, g).$$

By continuity of $a(\bullet, \bullet)$, the operator A is bounded in the operator norm. By virtue of the Hilbert triplet we may consider the embedding

$$J = I_{H \hookrightarrow V^*} \circ I_{V \hookrightarrow H} : V \hookrightarrow V^* \text{ with } \langle Jf, g\rangle_* = \langle f, g\rangle_H,$$

such that the weak problem (4.4) can be framed as finding $f \in V$ solving

$$Af = \lambda Jf.$$

The construction of J also implies that $J|_H$ is a continuous embedding, and as such we can write the problem as simply

$$Af = \lambda f \text{ for } f \in H. \tag{B.1}$$

There is no need to worry about the fact that we have expanded the problem to look for $f \in H$. We shall see that the problem (B.1) is still so intimately tied to (4.4) as to net us eigenfunctions in V in the end.

The trick is to now consider $A + \lambda_0 I : V \to V^*$. Since this operator is nonzero due to the weak coercivity, meaning for $\|g\|_V = 1$ that

$$\|A + \lambda_0 I\|_{op} \geq \langle (A + \lambda_0 I)g, g\rangle_* = a(g, g) + \lambda_0 \|g\|_H \geq c > 0,$$

it follows by the Riesz representation theorem there exists an inverse $(A + \lambda_0 I)^{-1} : V^* \to V$. We define the **resolvent**

$$\mathfrak{R}_0 := (A + \lambda_0 I)^{-1}|_H \colon H \to V.$$

Applying $\mathfrak{R}_0$ to (B.1) after adding $\lambda_0 f$ on both sides gives,

$$f = (\lambda_0 + \lambda)\mathfrak{R}_0 f \iff \mathfrak{R}_0 f = \frac{1}{\lambda_0 + \lambda} f. \tag{B.2}$$

This problem (B.2) is equivalent to (B.1) since we may analogously start from the above and apply $A + \lambda_0 I$ to get back (B.1) after lastly subtracting $\lambda_0 f$.

The resolvent is the operator we are looking for; it is self-adjoint and compact. Indeed, we have

$$\langle \mathfrak{R}_0 f, g\rangle_H = \langle \mathfrak{R}_0 f, (A + \lambda_0 I)\mathfrak{R}_0 g\rangle_H = a(\mathfrak{R}_0 g, \mathfrak{R}_0 f) + \lambda_0 \langle \mathfrak{R}_0 g, \mathfrak{R}_0 f\rangle_H,$$

so $\mathfrak{R}_0$ is clearly self-adjoint. Furthermore since $V \hookrightarrow^c H$, it holds that $\mathfrak{R}_0$ is compact as an operator from H to H.

Applying Theorem B.1 to $\mathfrak{R}_0$ allows us to prove

Theorem B.1 (Spectral theorem for (4.4))**.**
Consider a Hilbert triplet $\{V, H, V^*\}$ with H separable and V compactly embedded into H. Given a symmetric, continuous and weakly coercive bilinear form $a(\bullet, \bullet)$ we have

(i) The spectrum $\sigma(a) \subset (-\lambda_0, \infty)$ is infinite, yet it can be ordered in a nondecreasing sequence $\{\lambda_k\}$ where each eigenvalue appears a number of times equal to its finite multiplicity. Also $\lambda_k \to \infty$.

(ii) H has an orthonormal basis of eigenfunctions $\{f_k\} \subset V$, such that

$$a(f_k, f_l) = \lambda_k \langle f_k, f_l\rangle_H = 0 \text{ for } \lambda_k \neq \lambda_l.$$

Proof. Let us keep the notation of the previous discussion, with $H = L^2(R_\Gamma)$ and $V = H^1(R_\Gamma)$. To the problem of finding $f \in H$ such that $\mathfrak{R}_0 f = \mu f$ there exists a set of eigenvalues $\{\mu_k\}$ and a corresponding orthonormal basis $\{f_k\} \subset H$ thanks to Theorem B.1. By virtue of the equivalence between (B.1) and (B.2), the orthonormal eigenfunctions $\{f_k\}$ are also eigenfunctions of (B.1). Moreover, these functions must necessarily be in V due to the definition of $\mathfrak{R}_0 : H \to V$.

Lastly, the eigenvalues λ of (B.1) are given by

$$\lambda_k = \frac{1}{\mu_k} - \lambda_0,$$

so that $\lambda_k > -\lambda_0$ and increasing in absolute value with increasing k. □

C

Appendix C: Reduction of quadratic forms

A positive definite quadratic form uniquely determines its flat torus, so it also uniquely determines the fundamental domain of said torus. This domain is a convex body, and this is the context in which Minkowski considered his theory of reduction [22]; in the whole class of representations for a convex body, can we find a particularly simple one described by geometrically extremal properties? Such considerations are typical in the *geometry of numbers*, initiated by Minkowski himself.

A positive definite quadratic form f has the following properties for $x, y \in \mathbb{R}^n$,

(i) $f(x) > 0$ if $x \neq 0$ and $f(x) = 0$ if $x = 0$,
(ii) $f(\alpha x) = \alpha^2 f(x)$ for all $\alpha \in \mathbb{R}$,
(iii) $f(x + y) \leq f(x) + f(y)$.

A function satisfying these is called *gauge function* and to every such function there is an associated convex body defined by $K := \{x : f(x) < 1\}$. Here, we are looking for a reduced gauge function (positive definite quadratic form) of the fundamental domain to a lattice.

C.1 Successive minima

Let Λ be the fundamental domain of a lattice, and f its associated gauge function (or positive definite quadratic form). For $\lambda > 0$, consider the number of $\mathbb{Z}^n$-points of the set $\lambda\Lambda := \{x : f(x) < \lambda\}$. If λ is very tiny, the only such point will be the origin, 0. Say we increase λ bit by bit, then eventually there will be a value, call it ν_1, where the interior of $\nu_1\Lambda$ contains no points of $\mathbb{Z}^n$, but the boundary will contain at least two.

Suppose there are vectors $b_1, \ldots, b_{k_1}$ such that every $\mathbb{Z}^n$-point on the boundary of $\nu_1\Lambda$ can be written as a linear combination of these (certainly such vectors exist, they can be taken as the $\mathbb{Z}^n$-points themselves.)

Now we may continue enlarging $\lambda\Lambda$, to the point where there are points of $\mathbb{Z}^n$ on the boundary which are *independent* of the vectors $b_1, \ldots, b_{k_1}$. We stop and denote this value λ by ν_2. Similarly, these points can be described by k_2 linearly independent vectors. Note that k_2 is not necessarily larger then k_1, just representing an entirely different set of vectors.

Continuing in this manner we eventually get a set of n linearly independent

vectors, with $k_1 + k_2 + \cdots + k_j = n$. Let

$$\begin{aligned} \mu_1 = \nu_1,\ \mu_2 \quad &= \nu_1,\ \ldots,\ \mu_{k_1} \quad &= \nu_1, \\ \mu_{k_1+1} = \nu_2,\ \mu_{k_1+2} \quad &= \nu_2,\ \ldots,\ \mu_{k_1+k_2} \quad &= \nu_2, \\ &\ldots \\ \mu_{k_1+\cdots+k_{j-1}+1} = \nu_j,\ \mu_{k_1+\cdots+k_{j-1}+2} &= \nu_j\ \ldots,\ \mu_{k_1+\cdots+k_j} = \nu_j, \end{aligned} \tag{C.1}$$

then we have found a set of unique *successive minima* $0 < \mu_1 \leq \mu_2 \leq \cdots \leq \mu_n$ to Λ, and an associated set of linearly independent vectors $b_1, \ldots, b_n$.

It is possible to define the successive minima using the gauge function instead. Set $\mathbb{Z}_0^n = \mathbb{Z}^n \setminus \{0\}$. It is clear that μ_1 must be the minimum value of $f(\mathbb{Z}_0^n)$, otherwise we would have found a point of $\mathbb{Z}^n$ earlier in our expansion of $\lambda\Lambda$. Conversely if $\mu_1 = \min f(\mathbb{Z}_0^n)$, then μ_1 must be the first value of λ we find such that the boundary of $\lambda\Lambda = \{x : f(x) < \lambda\}$ contains a $\mathbb{Z}^n$-point.

Let $\mu_1 = f(b_1)$ for some vector b_1. Then removing the span of b_1 from $\mathbb{Z}^n$ and looking for the minimum of f in this set, gives us μ_2. Similarly if b_2 achieves $f(b_2) = \mu_2$, then μ_3 is defined by the minimum of f over $\mathbb{Z}_0^n \setminus \mathrm{Span}_{\mathbb{R}}\{b_1, b_2\}$, and so on. The arguments for why they coincide with the definitions in (C.1) are analogous to the argument for μ_1 in the prior paragraph. Thus,

$$\mu_k = f(b_k) = \min\{f(x) : x \in \mathbb{Z}_0^n \setminus \mathrm{Span}_{\mathbb{R}}\{b_1, \ldots, b_{k-1}\}\},\ \text{for } k = 1, 2, \ldots, n$$

Note that the vectors in $\{v_i\}$ are not necessarily a basis of $\mathbb{Z}^n$. This is what we turn to figuring out next.

C.2 Reducing a basis

A primitive set of vectors of a lattice $\Lambda \subset \mathbb{R}^n$ is a set of vectors $\{u_1, \ldots, u_k\}$ $(k \leq n)$ of the lattice Λ such that if a vector $u \in \mathrm{Span}_{\mathbb{R}}\{u_1, \ldots, u_k\}$ is also a lattice vector $(u \in \Lambda)$, then u must necessarily be an *integer* linear combination

$$u = \alpha_1 u_1 + \cdots + \alpha_k u_k,\ \text{for } \alpha_1, \ldots, \alpha_k \in \mathbb{Z}.$$

We have the following lemma, for whose proof the reader is referred to [22].

Lemma C.1.
Any primitive set of vectors of a lattice $\Lambda \subset \mathbb{R}^n$ can be extended to a basis for the lattice.

For a set of vectors $\{u_1, \ldots, u_k\}$ to be extended to a basis simply means that there are vectors $w_{k+1}, \ldots, w_n$ such that $\{u_1, \ldots, u_k, w_{k+1}, \ldots, w_n\}$ is a basis.

Let $\{v_1, \ldots, v_{k-1}\}$, for $k - 1 \leq n$, be a primitive set of independent vectors of $\mathbb{Z}^n$. Let us then define

$$\begin{aligned} P(v_1, \ldots, v_{k-1}, +) := \{v \in \mathbb{Z}^n : \{v_1, \ldots, v_{k-1}, v\} \\ \text{is a primitive set of independent vectors}\}, \end{aligned} \tag{C.2}$$

such that when $k = 1$, we have $P(+) = \{\text{all primitive vectors of } \mathbb{Z}^n\}$. With this set (C.2) in hand, we may consider a similar approach as in the previous section to find successive minima, but ending up with vectors which form a basis in the end. However, these new values which we shall call λ_i will have the property of $\lambda_i \geq \mu_i$ for all i. This is nevertheless a small price to pay for what we gain.

First, the minimum of $f(\mathbb{Z}^n)$ is certainly achieved by a primitive vector, so $\lambda_1 = f(b_1) = \mu_1$ for $v_1 = b_1 \in P(+)$. Then we may minimise f over $P(v_1, +)$, which is a smaller set than $\mathbb{Z}^n$ that in particular does not include v_1, and denote this value by $\lambda_2 = f(v_2)$ for $v_2 \in P(v_1, +)$. We continue in the same way, choosing $v_k \in P(v_1, \ldots, v_{k-1}, +)$ such that $\lambda_k = f(v_k)$ is a minimum of f over $P(v_1, \ldots, v_{k-1}, +)$. In this way we end up with values $\lambda_1 \leq \lambda_2 \leq \cdots \leq \lambda_n$ such that for $k = 1, 2, \ldots, n$,

$$\begin{cases} \lambda_k = f(v_k) = \min\{f(x) : x \in P(v_1, \ldots, v_{k-1}, +)\}, \\ v_k \in P(v_1, \ldots, v_{k-1}, +) \end{cases} \tag{C.3}$$

where the set $\{v_1, \ldots, v_n\}$ is a basis for $\mathbb{Z}^n$.

The set of vectors satisfying (C.3) is not unique, we may for instance replace any v_2 with $-v_2$. To get uniqueness we make use of the fact that the particular gauge function for the lattice Λ is a positive definite quadratic form f. Therefore it has an associated symmetric bilinear form $\widehat{f}$, and we require

$$\widehat{f}(v_{i+1}, v_i) \geq 0, \text{ for } i = 1, 2, \ldots, n-1. \tag{C.4}$$

A quadratic form satisfying (C.3) and (C.4) is called **reduced in the sense of Minkowski** (or simply **reduced**). One question remains: does such a reduced form f represent its class, i.e. does it hold that all forms $F \in [f]$ are such that $f = F \circ B$ for some $B \in GL_n(\mathbb{Z})$?

The following lemma, whose proof the reader can again find in [22], holds.

Lemma C.2.
For a basis $\{v_1, \ldots, v_n\}$ of a lattice Λ and a vector $x \in \Lambda$, the set $\{v_1, \ldots, v_{k-1}, x\}$ is primitive if and only if the greatest common divisor of the coordinates $x_k, x_{k+1}, \ldots, x_n$ is equal to 1 (i.e. $gcd(x_k, \ldots, x_n) = 1$.)

The lemma implies that we can rewrite (C.3) as

$$\lambda_k = f(v_k) \leq f(x), \text{ for all } x \text{ with } \gcd(x_{k+1}, \ldots, x_n) = 1, \text{ for } k = 1, 2, \ldots, n. \tag{C.5}$$

Thus, starting from any positive definite quadratic form F the reduction procedure precisely amounts to finding a particular unimodular matrix B such that (C.5) holds for $f = F \circ B$.