CHALMERS

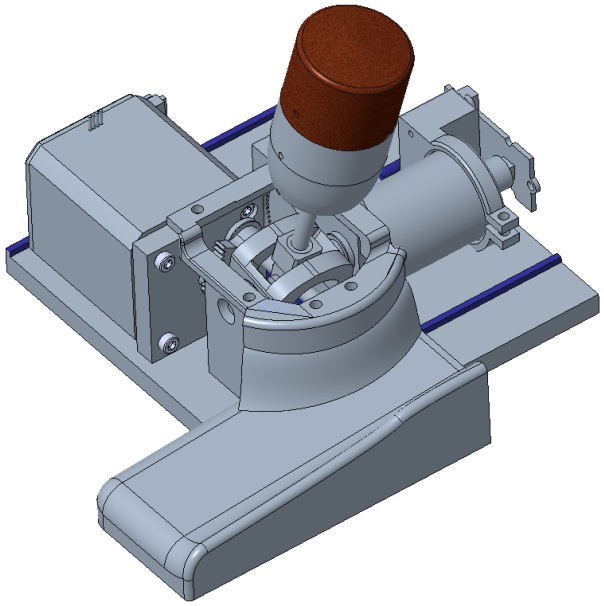

Joystick With Haptic Feedback for Vehicle Maneuvering

Master's thesis in Automotive Engineering

ERIC GUSTAFSSON
JONATHAN PERSSON

Department of Mechanics and Maritime Sciences
CHALMERS UNIVERSITY OF TECHNOLOGY
Göteborg, Sweden 2021

MASTER'S THESIS 2021:33

Joystick With Haptic Feedback for Vehicle Maneuvering

ERIC GUSTAFSSON
JONATHAN PERSSON



CHALMERS
UNIVERSITY OF TECHNOLOGY

Department of Mechanics and Maritime Sciences
Division of Vehicle Engineering and Autonomous Systems
CHALMERS UNIVERSITY OF TECHNOLOGY

Göteborg, Sweden 2021

Joystick With Haptic Feedback for Vehicle Maneuvering
ERIC GUSTAFSSON
JONATHAN PERSSON

© ERIC GUSTAFSSON, JONATHAN PERSSON, 2021

Supervisor: Adrian Stanikowski, CPAC Systems AB
Examiner: Peter Forsberg, Department of Mechanics and Maritime Sciences
Master's thesis 2021:33
Department of Mechanics and Maritime Sciences
Division of Vehicle Engineering and Autonomous Systems
Chalmers University of Technology
SE-412 96 Göteborg
Sweden
Telephone: +46 (0)31-772 1000

Cover:
CAD-illustration of the prototype joystick with haptic feedback

Chalmers Reproservice
Göteborg, Sweden 2021

Joystick With Haptic Feedback for Vehicle Maneuvering
Master's thesis in Automotive Engineering
ERIC GUSTAFSSON
JONATHAN PERSSON
Department of Mechanics and Maritime Sciences
Division of Vehicle Engineering and Autonomous Systems
Chalmers University of Technology

Abstract

During this work a force feedback joystick with game changing functions for the marine industry has been developed. The developed joystick can single handed be the main steering device for marine vessels during both docking and normal driving. It can handle all needed input (steering, throttle, gear change), and simultaneously give all expected feedback. It will even provide feedback that you did not think was possible from a joystick, like feedback from the engines, drives and surround sensors.

During the work, two modular test rigs were designed and manufactured, eleven different solutions for braking, resistance and feedback in the stick was evaluated, seven new functions were implemented and one prototype was manufactured and tested.

Keywords: Joystick, haptic feedback, force feedback, vehicle maneuvering

Acknowledgements

We would like to express our deepest thanks to our supervisor, Adrian Stanikowski, examiner, Peter Forsberg, and everyone else involved from CPAC Systems for their support, feedback and ideas. Without you working on this thesis would not have been as enjoyable as it has been and the result not nearly as good.

Thesis advisor: Adrian Stanikowski, CPAC Systems AB
Thesis examiner: Peter Forsberg, Department of Mechanics and Maritime Sciences

Contents

Abstract i

Acknowledgements iii

1 Introduction 1
- 1.1 Purpose . . . 2
  - 1.1.1 Research questions . . . 2
- 1.2 Limitations . . . 3

2 Theoretical framework 4
- 2.1 Coordinate system definition . . . 4
- 2.2 Haptic feedback . . . 4
  - 2.2.1 Graspable haptic systems/devices . . . 5
  - 2.2.2 Haptic vibrations . . . 5
- 2.3 Electric brushed DC-motors . . . 5
  - 2.3.1 Torque and speed control of electric brushed DC-motors . . . 5
  - 2.3.2 Positional control of electric brushed DC-motors . . . 5
- 2.4 Stepper motors . . . 5
  - 2.4.1 Control of stepper motors . . . 6
  - 2.4.2 Control of speed and torque stepper motors . . . 6
  - 2.4.3 Stepper characteristics . . . 7
- 2.5 Direct current-Solenoids . . . 7
- 2.6 Transmissions . . . 7
  - 2.6.1 Spur gears . . . 7
  - 2.6.2 Toothed belt . . . 8
  - 2.6.3 Chain and sprocket . . . 8
- 2.7 Coil springs . . . 8
- 2.8 Ergonomics . . . 8
- 2.9 Measuring quality of user experience . . . 9
- 2.10 Applicable laws and external requirements . . . 9
- 2.11 Competitor analysis . . . 10

3 Method 11
- 3.1 Product understanding . . . 11
  - 3.1.1 Analysis of the current CPAC joystick-solution . . . 11
  - 3.1.2 Analysis of a gaming force feedback joystick . . . 12
  - 3.1.3 Joystick test rig . . . 12
  - 3.1.4 Tests with different actuators and spring solutions . . . 13
- 3.2 User understanding . . . 14
  - 3.2.1 Test rig user test . . . 14
- 3.3 Requirement specification . . . 14
- 3.4 Concept generation . . . 15
- 3.5 Concept selection . . . 15
- 3.6 Prototype . . . 15
  - 3.6.1 Motor selection . . . 15
  - 3.6.2 Gear ratio selection . . . 15
  - 3.6.3 Electric BDC-motor control . . . 15
  - 3.6.4 Material selection . . . 15
  - 3.6.5 Ergonomic considerations . . . 15
  - 3.6.6 Design for manufacture considerations . . . 16

3.6.7 Structural analysis of joystick joint setup . . . 16
3.6.7.1 Structural analysis impact loading case . . . 16
3.6.7.2 Structural analysis torque loading case . . . 17
3.7 Testing of prototype . . . 18
3.7.1 User test on prototype . . . 18
3.7.2 Requirement specification fulfilment . . . 19

4 Results **20**
4.1 Evaluation of joysticks on the market . . . 20
4.1.1 Evaluation of current CPAC joystick . . . 20
4.1.2 Evaluation of gaming force feedback joystick . . . 20
4.2 Testing of solutions on test rigs . . . 21
4.2.1 Brushed DC-motor as actuator for resistance and feedback . . . 22
4.2.2 Stepper motors . . . 22
4.2.3 Spring for resistance with a mechanism allowing one spring to provide resistance in both +/- direction . . . 23
4.2.4 Double springs . . . 24
4.2.5 Rubber band . . . 24
4.2.6 Magnetic friction brake . . . 25
4.2.7 Grease damper . . . 25
4.2.8 Solenoids, directly actuating . . . 25
4.2.9 Solenoids, for engaging and disengaging of a spring mechanism . . . 26
4.2.10 Solutions not tested on test rigs . . . 26
4.3 User test test rigs . . . 26
4.4 User needs . . . 27
4.5 Joystick functions . . . 27
4.5.1 Docking mode . . . 28
4.5.1.1 Close to maximum actuation is reached . . . 28
4.5.1.2 The joystick is moved faster than the actuator(s) can move . . . 28
4.5.1.3 Docking mode with surround sensors . . . 29
4.5.2 Driving mode . . . 29
4.5.2.1 Feeling in high speed maneuvering . . . 29
4.5.2.2 Throttle function and gear changing mechanism concept evaluation . . . 29
4.5.2.3 Changing of gears and throttle function . . . 30
4.5.3 Transition between modes . . . 32
4.6 Concept generation . . . 32
4.6.1 Concept generation X-axis . . . 32
4.6.2 Concept generation Y-axis . . . 32
4.6.3 Concept generation Z-axis . . . 33
4.6.4 Concept generation common features . . . 34
4.7 Requirement specification . . . 34
4.8 Concept selection . . . 34
4.8.1 Concept selection X-axis . . . 34
4.8.2 Concept selection Y-axis . . . 35
4.8.3 Concept selection Z-axis . . . 35
4.8.4 Concept selection common features . . . 35
4.9 Mechanical design of prototype . . . 36
4.9.1 Joystick joint . . . 36
4.9.2 Motion arc and range of motion . . . 38
4.9.3 Motion pattern . . . 39
4.9.4 Z-axis design . . . 40
4.9.5 Choice of stepper motor . . . 41
4.9.6 Choice of BDC-motor . . . 41
4.9.7 Choice of gear reduction and type . . . 41
4.9.8 Sensor placement . . . 41
4.9.9 Material selection and cost breakdown . . . 41

4.9.10 Ergonomics considerations . . . 41
4.9.11 Structural analysis of the joystick joint . . . 42
4.9.11.1 Structural analysis impact loading case . . . 42
4.9.11.2 Structural analysis torque loading case . . . 44
4.10 Building of prototype . . . 46
4.11 User test of prototype . . . 48
4.12 Prototype fulfilment of requirement specification . . . 49

5 Discussion **50**
5.1 Test rigs . . . 50
5.2 User needs . . . 50
5.3 Electric solution vs semi electric solution . . . 50
5.4 Prototype . . . 50
5.4.1 Joystick joint . . . 50
5.4.2 Positional sensors . . . 51
5.4.3 Stepper motor control . . . 51
5.4.4 Choosing BDC-motor . . . 51
5.4.5 Placement of motors . . . 51
5.4.6 BDC motor vs stepper motor . . . 51
5.4.7 Noise of motors and drivers . . . 51
5.4.8 Impact of friction on feeling . . . 51
5.4.9 Structural analysis of the prototype . . . 52
5.4.10 Testing of prototype . . . 52
5.5 Implementation in other fields . . . 52

6 Conclusions **53**

References **54**

A Requirement specification **56**

B Pugh-matrix X-axis **57**

C Pugh-matrix Y-axis **58**

D Cost and time breakdown of the prototype **59**

1 Introduction

When the controls of vehicles change from mechanically attached to drive by wire systems, a new discussion has to start about what kind of feedback a driver or operator needs and how this feedback will be provided. With a traditional mechanically connected system, the operator of a vehicle can feel in the steering wheel if he/she is steering fully, know how far the wheels have been turned, and feel the external forces from the tires, like if the vehicle hits a rock or a pot hole. One could also discuss about what the control input device should look like. Steering wheels, and levers for accelerator and gear changes were originally design to give the operator enough lever to do actuation by muscle. With drive by wire systems this is no longer necessary. However, this work will not cover that discussion, as it focuses on developing a joystick with haptic feedback.

Drive by wire systems with electric servos gives road vehicles and marine vessels more degrees of freedom in the control of the actuators, where wheels or stern drives can be both steered and propelled individually. To have an individual steering device for every actuator when the number of actuators is more than one poses an incredible challenge for the operator, and the usability would most likely be low. Therefore there is a need for a new kind of control device which seamlessly can actuate many actuators at the same time. This paper proposes a joystick solution for this problem applied to marine vehicles, more specifically leisure boats and commercial crafts 30 ft and larger. More than one actuator affecting the same physical property implies that the system is overactuated [15]. This makes the system more flexible and offers the possibility of greater control. For example if one actuator fails the system can still function or a movement can be optimized against a cost function. Other benefits of having a overactuated system is making movements possible which would be impossible with only one actuator. For example side way parking and small turning radius for four wheel steered cars, completely vertical lifting for boom cranes with split boom, or side way driving of boats with multiple engines.

There have been numerous studies on how the performance of the driver of a car changes when the steering system is changed from traditional to drive by wire with joysticks. Two of the more recognized studies have been performed at the Swedish National Road and Transport Research Institute (VTI) by Peters [25] and Östlund and Peters together [24]. The VTI studies have been executed with real cars on a track instead of in simulators. The main problems with the tested drive by wire systems of Östlund/Peters and Peters were: Delay between the joystick and steering actuator, and interference between longitudinal and lateral control. They both suggested that this could probably be solved with some form of feedback. In a study executed on agricultural vehicles [17] it was found that a steering wheel with force feedback significantly improved the performance of the driver compared with a steering wheel without force feedback.

On the market today there are several joysticks for marine vessels. To not confuse the driver, all joysticks in marine vessels have to give the same result in movement with the same input of the joystick in docking mode. This is regulated in both in the American ABYC standard [1] and the European ISO [27] documents. To summarize, the boat should in docking mode do a side maneuver when the stick is pushed sideways, to the left when the stick is pushed to the left and to the right when the stick is pushed to the right, drive forward when the stick is pushed forward, reverse when the stick is pushed backwards, and turn around its own axle when the stick is turned. To enable these movements at least two independent powertrains on the boat is required to achieve these movement, sometimes a bow stern is used to help the movements. In driving mode there are less restrictions and the only restriction by standards or laws is that when pushing the joystick left the boat should turn left and vice versa. The top of the joystick and forward movement have no such demands.

CPAC Systems AB has today a joystick solution for maneuvering of marine vehicles, displayed in figure 1.1. When the product was first launched on the market its intention was to simplify docking of marine vehicles. Thus the product was made quite simple and small so it could be installed in so called stations in multiple different locations on the same boat. As the product has matured it has been started to be used to drive the boat at larger speeds than docking normally requires. Mechanically the joystick has a spring to return to its neutral position when released. Meaning that the joystick has no ability to provide any active feedback such as haptic feedback or adjustable resistance etc. It is not possible to change the performance or feeling of the joystick whilst switching from the docking mode to the driving mode.



(a) *The current joystick solution*



(b) *The mechanical solution behind the current joystick*

Figure 1.1: *Current joystick solution from CPAC Systems AB .*

1.1 Purpose

The purpose of the project is to develop a prototype joystick module focused on marine application with adjustable features and haptic feedback depending on application. As baseline is the CPAC system AB's joystick for marine vehicles, and the known problems/improvement possibilities it has. This thesis will cover the process of understanding the user and develop a mechanical solution which has the ability to provide feedback to the joystick. The prototype will be validated both subjectively and objectively by a test panel. The identified scenarios to be looked into are:

- Make it possible to feel when the steering actuators are in desired position and when the propelling actuator is engaged.
- Notify if maximum actuation is reached.
- Avoid furious maneuvers while driving at high speed, but still be able to avoid accidents.
- Enable cruise control/trolling mode.
- Give notification if obstacles are close.
- Give a possibility to give the operator information from surround sensors.
- Low versus high speed maneuvering, giving different feedback and the possibility for progressive feedback/resistance.
- Give the possibility for the operator to feel what mode is engaged.
- Help the operator to seamlessly change driving modes.

1.1.1 Research questions

This thesis aims to answer the following questions:

- What kind of actuating solutions for implementing haptic feedback in a joystick are the most suitable with regards to robustness, packaging, feeling and flexibility?
- Is it possible to build a joystick that can intuitively help the operator to seamlessly change driving mode?

- Is it possible to combine the different input devices (Steering wheel, throttle pedal, gear changer, etc) into one standalone solution without risking a lack of feedback and loss of intuitiveness?
- Is it possible to design a joystick with haptic feedback without making the packaging significant larger than without haptic feedback?

1.2 Limitations

To limit the scope certain aspect will not be focused on, which are:

- The mechanical solution of feedback will be in focus and thus, human machine interface, design and user friendliness will be secondary and only focused on if time is available for it or necessary for the mechanical solution.
- The user case of a marine vessels will only be focused on.
- Only one prototype will be built and evaluated.
- The prototype should follow standards from American Boat and Yacht Council (ABYC) and Swedish Institute for Standards (SIS).
- If electronic components will be needed in the building of the prototype, only off the shelf products will be used.

2 Theoretical framework

In this chapter relevant theory, external demands and an analysis of competing products will be presented.

2.1 Coordinate system definition

In figure 2.1 the coordinate system definition which will be used in this paper is introduced. It follows current convention used by CPAC Systems AB to avoid confusion. Y-axis follows the longitudional direction of the boat and positive is forward. X-axis is the lateral direction of the boat positive to the starboard of the boat. Z-axis is positive up from the ground plane. The coordinate systems origin is the mass centre of the boat.

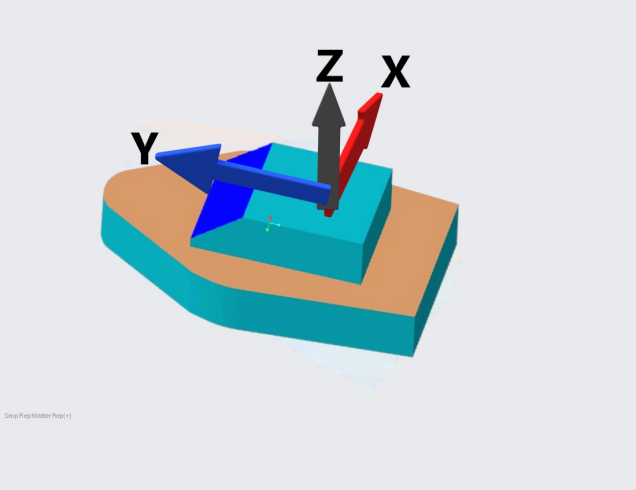

Figure 2.1: *Coordinate system definition visualized on a model boat*

2.2 Haptic feedback

There are many different types of haptic feedback devices and modalities. Chouvardas, Miliou and Hatalis [8] summarizes different methods of providing haptic feedback and the way the methods manipulate human tissue and sense. Haptic feedback is tactile ques which manipulates the skin's receptors to have the feeling of touching something [11]. It can be used to remotely feel something, amplify actual forces or increase user immersion into a system. Haptic feedback can be divided into two different modalities: kinesthetic and tactile [11]. Where kinesthetic sensations are felt though muscles, tendons and joints and tactile sensations are perceived through receptors in the skin. Haptic feedback can also be divided into how the user interacts with the technology, according to [11] there are three major categories: graspable, wearable and touchable. Due to this paper focusing on a joystick for vehicle maneuvering the focus falls on the graspable technology and how it interacts with the user.

Some examples where haptic feedback have been used to improve performance of the user include surgery, control allocating in vehicles and systems giving the user a more immersive feeling while operating. Wagner, Stylopolous and How [30] found that force feedback reduced the overall force used in robotically assisted surgery and the amount of errors were reduced. When not having force feedback 3 times the number of errors were made that damaged tissue. Amplifying the feedback to 150% the actual force decreased errors and the dissected area was smaller (while still sufficiently doing the job). Morris, Tan, Barbagli, Chang and Salisbury [21] compared learning using haptic feedback to learn an abstract motor skill that required learning a sequence of forces. The training methods compared was haptic, visual and combined visuohaptic training. The results show that visuohaptic training was superior to haptic or visual training alone.

Mulder showed that incorporating haptic feedback into a gas pedal decreased control activity by the driver and some performance gain was found [22]. The scenario Mulder tested was car-following behaviour in a fixed base simulator. Adell, Várhelyi and Hjälmdahl tested a similar scenario but implemented it in real world private

vehicles. They tested two different systems first was a haptic gas pedal and the second a visual and audio cue both programmed to give feedback when the driver is not following the current speed limits. Their findings showed both systems to be effective in reducing the mean speed and the 85 percentile speeds, however the haptic gas pedal was more effective [2].

2.2.1 Graspable haptic systems/devices

A joystick for vehicle maneuvering falls under graspable haptics devices. A graspable device is commonly a kinesthetic device (force-feedback) [11], normally grounded to a surface and the user grasps the devices. The device might be a pen, joystick or something else which the user interacts with through grasping.

2.2.2 Haptic vibrations

Haptic vibrations can be used to signal choices in menues or indicate dangers/notifications. Varying the frequency, amplitude rhytm and envelope [11] of the vibrations a multitude of messages can be sent to the user and understood. Thus messages can be sent through a joystick to give the user information about imminent dangers, obstacles or infotainment information/choices.

2.3 Electric brushed DC-motors

All electric machines have a few things in common such that all have a stationary unit called the stator and rotating member called the rotor [9]. Other than that electric machines comes in all kinds of shapes and designs. The electric machine of focus here is the brushed permanent magnet motor (BDC). BDC motors are very common in the industry and especially automotive industry [18, 9] where small, cheap, simple and robust motors are required for actuation. BDC uses direct current to drive and the magnetic field is switched using a commutator assembly [18].

2.3.1 Torque and speed control of electric brushed DC-motors

The speed of a BDC is directly proportional against applied voltage [16] thus whilst using digital control a pulse-width modulated signal (PWM) can be sent to apply an average voltage and control speed [9, 16]. Using PWM the speed will be proportional to the duty cycle of the PWM-waveform. According to [13] equation 2.1 described the relationship between the angular velocity ω, induced voltage U_i, total flux per pole Φ and $c = zp/2a\pi$ (z No. armature conductors, p number of pole pairs and a number of parallel winding circuits).

$$\omega = \frac{U_i}{c\Phi} \tag{2.1}$$

In a similar fashion the torque T can be described from equation 2.2 and is proportional to armature current I_a.

$$T = c\Phi I_a \tag{2.2}$$

2.3.2 Positional control of electric brushed DC-motors

BDC motors have no inherit control of position but in conjunction with a positional sensor good positional accuracy can be achieved [16]. Optical encoders are widely used but different options are available such as hall effect sensors. In conjunction with a PID-controller good and easy controllability can be achieved.

2.4 Stepper motors

There are several kinds of stepper motors, which all offer different benefits and drawbacks. All offer a great control of position with different step sizes depending on motor design and high torque at low speeds [10]. The common types are variable reluctance, permanent magnet and hybrid mix. A characteristic of the stepper is the ability to produce a high holding torque. Holding torque refers to the amount of torque the stepper motor can produce to resist a torque applied from a stationary condition. Permanent magnet and hybrid versions also exhibit a detent torque where the magnet attracts the poles even whilst the windings are not energized.

Variable reluctance steppers do not produce the same phenomena due to the fundamental design of it. A precise definition or description of a stepper motor is difficult to define according to Athani [4] but British Standard Specifications [7] have defined a stepper motor as:

> "A stepper motor is a brushless DC motor whose rotor rotates in discrete angular increments when its stator windings are energised in a programmed manner. Rotation occurs because of magnetic interaction between rotor poles and poles of the sequentially energised stator windings. The rotor has no electrical windings, but has salient and/or magnetised poles."

Permanent magnet steppers comes in two different configurations, unipolar and bipolar. Where the bipolar stepper gives more torque per motor size with the drawback that it requires a more complicated drive circuit [10].

The basic principle of the stepper is a cogged rotor, see figure 2.2 for illustration, which is offset from the field windings. While switching which field winding is energized the stepper motor cogs over one increment of the cogs of the rotor. The rotor and the windings have a built in offset to produce the movement of the shaft.

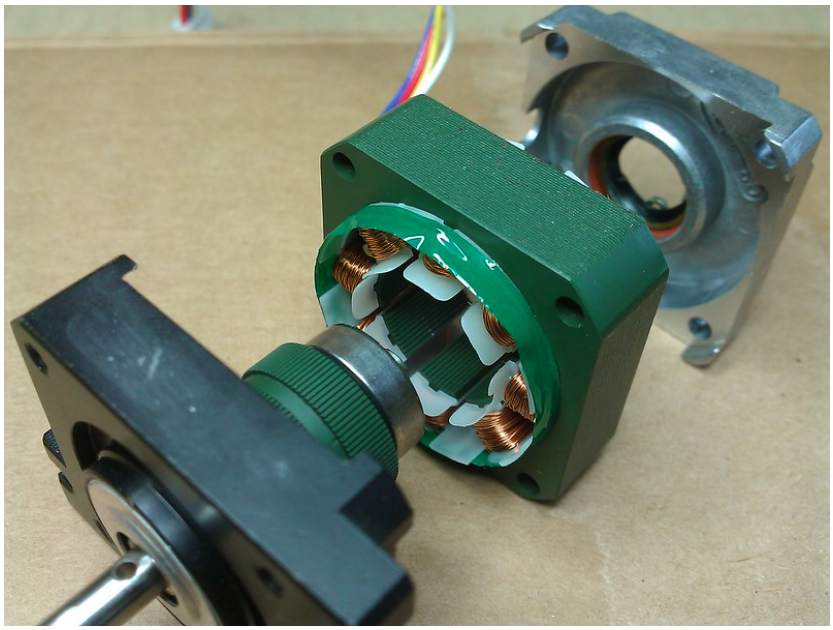

Figure 2.2: *The insides of a stepper motor displaying the cogged rotor to the left and the stator in the middle, photo courtesy of Euphy [12]*

2.4.1 Control of stepper motors

Stepper motors normally move in a precise quantified increment called steps [10, 29]. This applies as long as the maximum torque is not exceeded. This means that the stepper motor has a built in open loop control inherent to the motor design. In an application where closed loop control or backdriving of the stepper is necessary an additional positional sensor is required.

According to [10] moving a whole step of the rotor at a time can cause jerky motions of the stepper and especially at low speeds. Microstepping solves many of these issues and can increase system performance. The basics of microstepping is that instead of switching polarly between the windings they are energized gradually via pulse-width modulation. Another benefit of microstepping is the increased resolution of steps of the stepper motor. Thus instead of taking a whole step it is divided into fractions commonly as high as 1/256 of a whole step.

2.4.2 Control of speed and torque stepper motors

Torque controlled via limiting the current and how the coils are energized. Speed is proportional to the frequency of the pulses sent to the stepper and the amount of steps per revolution as long as maximum torque is not exceeded and steps are missed.

2.4.3 Stepper characteristics

Some basics characteristics metrics of a stepper motor are presented in table 2.1 description of the characteristics are based off [4, 10].

Table 2.1: Basic characteristics metrics of a stepper motor

Step size	Angle increment each whole step produces
Step angle accuracy	Positional accuracy of each step. Normally a non-cumulative error.
Holding torque	The torque the motor can hold stationary
Detent torque	The torque the motor exhibits whilst windings are not energized
Rated speed	Maximum speed of the motor before steps are lost
Pull in torque	The torque the motor can start from a standstill without missing steps
Pull out torque	The torque the motor can produce at operating speed without missing steps

2.5 Direct current-Solenoids

Direct current-solenoids, hereafter called solenoids, are simple electric linear actuators consisting of a coil that can be energised and a movable core called a plunger. Solenoids are common for controlling proportional valves and some linear actuation cases where two distinct position are required. One of the positions is resting position where the coil is not energized, and the other is active position, where energizing is needed. Solenoids are strong and fast over a short distance. With coils of 50mm length, you normally find the range of actuation to be 5-10mm, example is from "Red-Magnetics" product line [26]. The force versus stroke curve alter a lot depending of the design of the solenoid but for typical solenoids that are available on the market, the force will alter with the power of ten over the specified stroke. Solenoids needs active controlling and an opposed force to be able to stop in other positions. For higher control one can put two coils in different direction on the same iron core.

2.6 Transmissions

There are many kinds of transmission however not all transfer torque with a shape dependency where the two shafts are not allowed to slip between each other. According to Evertsson [20] there are three major kinds which are shape-dependant torque transfer where the relative position of the shaft is constant. These are spur gears, toothed belt drive and chain drive.

2.6.1 Spur gears

Spur gear transmission is a simple and common way to transfer torque. Spur gears operate on a fixed distance between the shafts, the reference shaft distance a can be found using 2.4. General parameters for a spur gear transmission are the module m, number of teeth on the respective wheels z_1 and z_2 here in a single step. There are a number of different radii to keep check of in the geometry of cogged gears however some of the more important ones are: r_b1 and r_b2 depicting the bottom radius and $r_{\omega 2}$, $r_{\omega 1}$ describing the rolling radius. The gear ratio i can be calculated using 2.3.

$$\frac{r_{\omega 2}}{r_{\omega 1}} = \frac{r_{b2}}{r_{b1}} = \frac{z_2}{z_1} = i \tag{2.3}$$

$$a = \frac{m(z_2 + z_1)}{2} \tag{2.4}$$

Some advantages for spur gear transmissions is that there is no need for a tensioner device. The shaft distance is set according to equation 2.4 and needs no adjusting after since there is minimal wear with a capability of transferring relatively large amounts of torque. When large gear reductions are needed spur transmission can be connected in multiple steps with ease. One drawback/considerations that needs to be accounted for is that a spur gear transmission always will exhibit some backlash between the gears. This is normal for proper engage of the teeth but in a design requiring good rotational accuracy between the shaft whilst changing directions this must be taken into consideration.

2.6.2 Toothed belt

A toothed belt drive has cogged wheels and a belt to transfer movement between the wheels. The belt is stiff in the length direction and flexible in one plane to travel over the wheels. The advantages are a silent operation, small space needed, maintenance free and high efficiency.

The gear ratio i_0 can be found using equation 2.5 using either the speeds of the two wheels ω_1 and ω_2 or the number of teeth on each wheel z_2 and z_1,

$$i_0 = \frac{\omega_1}{\omega_2} = \frac{z_2}{z_1} \tag{2.5}$$

The approximate length of the belt L with a given shaft distance a can be approximated using 2.6 where d_1 and d_2 is the average engagement diameter of the belt.

$$L \approx 2a + \frac{\pi(d_1 + d_2)}{2} + \frac{(d_2 - d_1)^2}{4a} \tag{2.6}$$

In order to function properly the toothed belt drive needs to have pretension. One way to tension the belt is to have some adjustment in the axle distance another is to have an idler gear with a spring or similiar which only purpose is to pretension the belt.

2.6.3 Chain and sprocket

A chain and sprocket transmission is similar to a toothed belt transmission in many ways but the wheels have a different shape and instead of a belt a chain is used. Chain drives offers the ability to transfer high torques but at low speeds and requires lubrication to function properly.

To find either the gear ratio or the approximate length of the chain the same equations as for the toothed belt applies, equation 2.5 and 2.6 respectively. Chain and sprocket drives also needs a pretension to work properly and the same methods described in chapter 2.6.2.

2.7 Coil springs

Coiled springs are a common machine element used today and has a widespread of applications. The stiffness of a spring can be found using 2.7 according to [20], where c_{twist} is the torsional stiffness, M_a torque, ϕ_a the torsional angle, E the E-module of the material, d the diameter of the coil, n number of active turns and D is the average diameter of the spring.

$$c_{twist} = \frac{M_a}{\varphi_a} = \frac{Ed^4}{64nD} \tag{2.7}$$

2.8 Ergonomics

Ergonomics for steering joysticks is intuitive, when designing a joystick one should aim to allow the hand to be in resting position as much as possible. According to Berlin and Adams [5] the resting position is as follows: "The hand has a functional resting position, in which the wrist is straight, the muscles are relaxed, the fingers lightly curled, and the pressure in the carpal tunnel (the narrow passage in the wrist that encases the median nerve and several tendons) is at its lowest."

Berlin and Adams has also listed a couple of design guidelines for hand tools, which can also be applicable for joysticks. The most relevant ones are listed below:

- Natural hand grips and the functional position of the hand should be used when working with hand tools – avoid bending and twisting.
- Design for low muscle tension during prolonged work.
- Provide large grip areas with low and equal pressure distribution on the hand and optimized force transfer through handle.

- Avoid sharp edges that may result in discomfort or pinch injuries - think of safety!
- Consider work environmental factors that may affect tool use, such as climate, vibrations, lighting, etc.
- For extreme climates, provide thermally isolated grip.
- Avoid vibrations, particularly in the injury range of 5 to 2000 Hz.
- Ensure low friction.
- Enable use in different positions and with different hand grips.
- Design tools to be easy to control and adjust without changing grip and/or while wearing gloves.
- Design tools to be possible to adjust to different hand and arm sizes, and to enable use with both hands if needed.

The average hand for the Swedish work force is 87.96 mm wide for men, and 78.65 mm for women. The average length is 193.80 mm for men and 179.51 mm for women [14].

2.9 Measuring quality of user experience

According to Albert and Tullis in their book "Measuring the user experience: collecting, analyzing, and presenting usability metrics" [3] describes what a user experience is and methods to collect analyze and present user metrics as they describe it. Albert and Tullis defines a user experiences as:

- A user needs to be involved
- The user must interact with a product, system or an interface
- The interaction needs to be observable and measurable and of course of interest

Norman argues that the performance of the product is critical and for the user to have a good user experience the product must be easy to use and the functionality should be easy to understand [23]. The product must have a meaning for the user i.e. solving a problem or making something easier for the user. The idea of behavioral design must be implemented though out the entire design phase to be successful in creating a good user experience.

In evaluating products in a user experiences centered way Albert and Tullis gives examples of questions which are critical to measuring user experience metrics [3]:

- *"Will the users recommend the product?"*
- *"Is this new product more efficient to use than the current product?"*
- *"How does the user experience of this product compare to the competition?"*
- *"Do the users feel good about the product or themselves after using it?"*
- *"What are the most significant usability problems with this product?"*
- *"Are improvements being made from one design iteration to the next?"*

2.10 Applicable laws and external requirements

The American Boat & Yacht Council determines standards applicable for boats and yachts in America while ISO is more applicable in Europe. These standards are often accepted directly as standards in other countries as well making them the commonly referred standard. The standard *"ABYC P-28 - Electric/electronic control systems for propulsion and steering"* outlines the most important parts for a joystick maneuvering boats [1]. The ISO standard *"Small craft – Electrical/electronic control systems for steering, shift and throttle (ISO 25197:2020)"* [27] has equal requirements as the ABYC but are stated with fewer words. The important requirements from SIS for this work are listed below.

- 5.3: For operation in the cruising mode, when grip on control head is released, the engine need not return to a low RPM (revolution per minute) or a manufacturer-determined idle state.
- 5.4: Releasing the control head in the manoeuvring mode to neutral position shall result in:— a disengaged transmission or water-jet bucket in the neutral position;and- a manufacturer-determined idle state or electric motors in the stopped state.
- 5.5: The craft shall move in the same direction as the control head is oriented relative to the craft.

- 5.6: Portable helms shall clearly indicate their orientation relative to the craft.
- 5.7: If the control head includes a rotation function, the control head activation, clockwise or counter-clockwise, shall result in rotating the craft in the same direction.
- 10.4.1.1: When fully moved in the +X and –X direction to its end-stop point, the joystick shall be capable of withstanding a force of 350 ± 5 N applied tangentially to the arc of the throw.
- 10.4.1.2: When fully moved in the +Y and –Y direction to its end-stop point, the joystick shall be capable of withstanding a force of 350 ± 5 N applied tangentially to the arc of the throw.
- 10.4.1.3: When fully twisted in the +Z and –Z direction, the joystick shall be capable of withstanding a torque of 7,5 ± 0,5 Nm.
- 10.4.2: Following this test, the system shall continue to operate without failure within the original parameters specified by the manufacturer.

2.11 Competitor analysis

The competitors can be divided into two categories; Joysticks for vehicle/marine maneuvering and joysticks with haptic feedback. Currently there is only one product designed for vehicle maneuvering that also has haptic feedback on the market. It is "Joysteer" from Bozzio AG [6]. Joysteer is developed for disabled people driving cars and Bozzio states that their solution is suitable for people with arm amputation, limited freedom of movement, limited strength or multiple sclerosis (MS). Information concerning the product is limited and the authors have tried to reach out to Bozzio for more information without result.



Figure 2.3: *Two-way joystick with force feedback from Bozzio AG*

In the category "Joysticks for vehicle/marine maneuvering", products from several marine companies can be found, like; Ray marine, Yamaha, Cummins, Seastar, Yanmar, JCS, JMS by ZF, Xenta and Mercury. They all have a basic docking mode similar to the CPAC/Penta joystick and none exempt themselves from the competition greatly. None of the competition have a "driving mode", in best case a feature to adjust the autopilot. They are all missing force feedback, which make them less relevant for further study. Similarly in the construction and agricultural segments there are a multitude of joysticks utilized however implementation of haptic and force feedback is not common on products which are on the market.

More interesting is the category "Joysticks with haptic feedback" where mostly gaming joysticks can be found. The Logitech Wingman Strike Force 3D [19] is on of these. To provide force feedback the joystick has two electric BDC motors with cogged gear transmission providing feedback in the X and Y-axis.

3 Method

In this chapter the methods used during the work will be presented. In figure 3.1 an outline of the concept development used in the project is presented. Note that sometimes an iterative process between steps was required. The product development process used was based on Ulrich's book Product Design and Development [28], using parts like understanding the users needs, Pugh matrix to rank concepts against each other, and Kesselring matrix for the final concept choice.

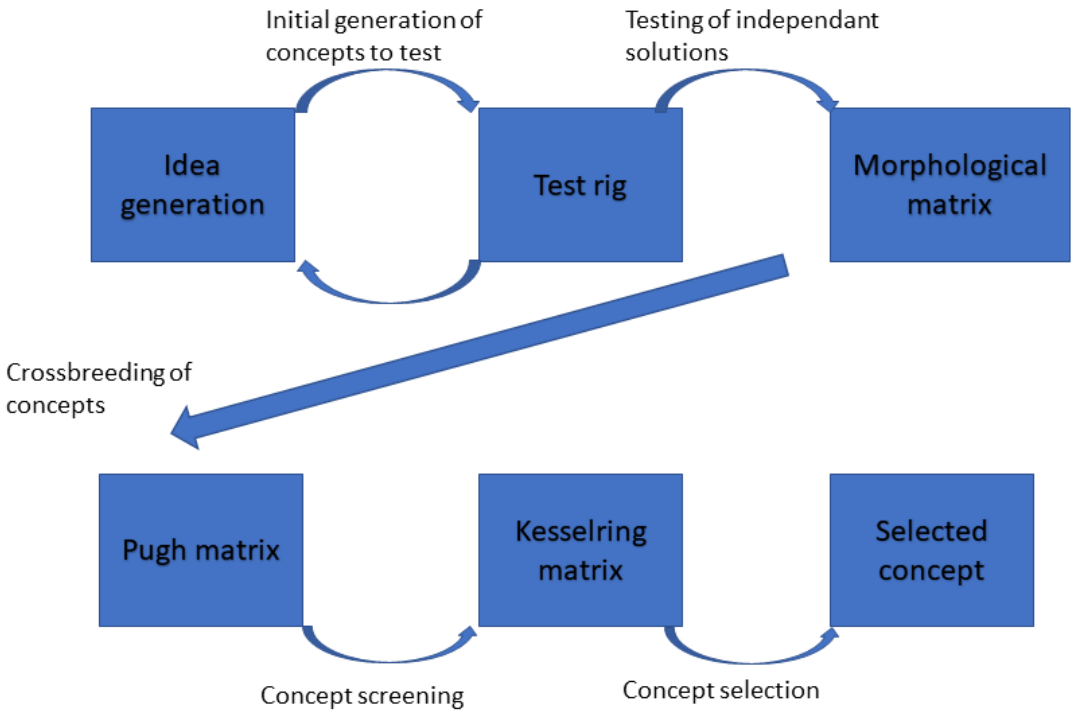

Figure 3.1: *Flow chart describing the product development process*

3.1 Product understanding

To understand the product better, it was decided to do a deep mechanical analysis of existing products. After that a test rig was built too even deeper understand the parts of a joystick and how they affect each other, and the feeling of the stick.

3.1.1 Analysis of the current CPAC joystick-solution

To get a good understanding of the problems and improvement areas of the Volvo Penta/CPAC joystick on the market today, a testdrive with the system was conducted. The boat was equipped with the Volvo Penta IPS system and joystick. During the testdrive the docking mode was tested with a side way docking manoeuvre, side way driving around an object and normal navigation inside the harbour. The joystick steering was tested both in high and low speed, mostly on open water.

The joystick was then measured and all relevant properties checked, like dimensions, spring stiffness, range of travel and motion arc. It was then disassembled and evaluated with respect to the mechanical solutions and ergonomics.

3.1.2 Analysis of a gaming force feedback joystick

A gaming joystick was tested, measured and disassembled - the Logitech Wingman Strike Force 3D, a force feedback joystick. It was tested with the Logitech software and all the forces was measured. The Logitech software gave a possibility to adjust resistance and damping of the stick, and it could also drive the stick in different patterns. Both the pulling and pushing force, and the holding torque was measured together with all dimensions. As a result of this, the torque of the brushed DC-motors were calculated along with the gear ratio achieved by a two-stage spur gear transmission. During the disassembly extra attention was put on the mechanical solutions in the joint and torque transferring parts.

3.1.3 Joystick test rig

A simple test rig was designed and built to test the feeling of different amount of feedback force, different range of motion, overall dimensions and different solutions to provide the force and resistance. The rig was designed to be easy to build and to provide an easy way to attach and remove different actuators like springs, brakes, motors etc. Eventually two test rigs were built to be able to test two solutions simultaneously and compare them side by side. An illustration of the test rig without any actuators added, can be found in figure 3.2.

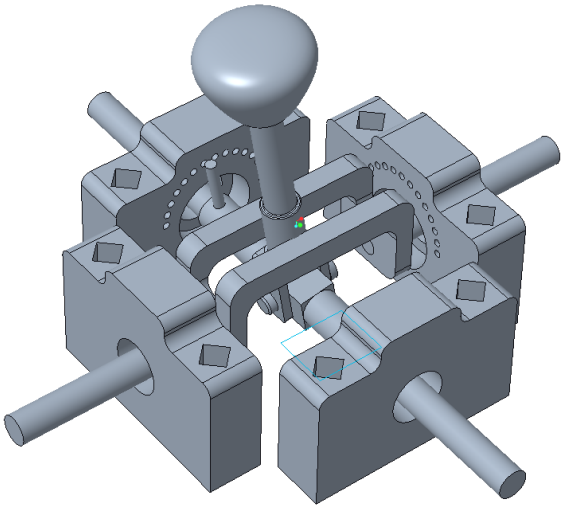

Figure 3.2: *Joystick test rig*

The test rigs were design with Design for Manufacture and Assembly in mind, in order to be able to build the test rigs quickly without much effort. Thus many parts were 3D-printed in order to save active time from the project. Other parts such as the axles were made of simple design in order to be lathed easily. In figure 3.3 the holes are rectangular to be able to be printed without printing supports. Thus printing with the bearing race upwards no supports are needed for the part.

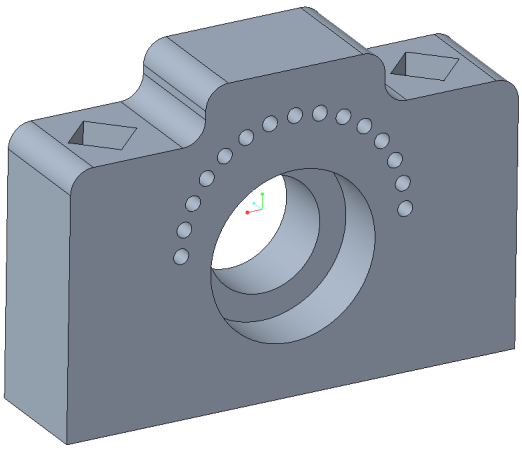

Figure 3.3: *Joystick test rig DFMA example of 3D-printed part requiring no supports*

The test rig consist of one underlaying shaft for the y-axis and a bridge for the x-axis which the joystick shaft pushes against. Both shafts were supported by a plain roller bearing. The shafts were extended out to be able to mount different assemblies of actuators and springs. The overall specifications of the test rig were based on the current CPAC joystick solution and some features such as range of motion were made adjustable to evaluate possibilities for improvements, see table 3.1 for specifications on the test rig.

Table 3.1: Joystick test rig specifications

Range of motion X-axis	±60°
Range of motion Y-axis	±60°
Motion arc X	75 mm
Motion arc Y	75 mm
Length of joystick above base	65 mm

3.1.4 Tests with different actuators and spring solutions

Possible usable actuators/mechanical elements for providing resistance and damping were obtained and tested in the rigs with respect to feeling and fulfilling of the initial goals. The evaluated actuators and elements were:

- Brushed DC-motor as actuator for resistance and feedback
- Spring for resistance with a mechanism allowing one spring to provide resistance in both +/- direction
- Double springs
- Rubber band
- Magnetic friction brake
- Grease damper
- Solenoids
- Stepper motors
- Electric linear actuators
- Pneumatic actuators
- Hydraulic actuators
- Brushless motors

All tested solutions were tested after the test schedule in table 3.2.

Table 3.2: Test schedule for the test rigs

Function
Make it possible to feel when the steering actuators are in desired position and when the propelling actuator is engaged.
Notify if maximum actuation is reached.
Avoid furious maneuvers while driving at high speed, but still be able to avoid accidents.
Enable cruise control/trolling mode.
Give notifications and warnings
Low versus high speed maneuvering, giving different feedback and the possibility for progressive resistance.
Give the possibility for the operator to feel what mode is engaged.
Help the operator to seamlessly change driving mode
Give the same basic functions as the joystick of today

3.2 User understanding

To understand the needs of the user better, interviews and a user test was held. All the information learned from the users tests, interviews and the analyses of joysticks was compiled to create a list of functions. These functions were then compared in term of significance and importance to choose which to realize in the prototype.

3.2.1 Test rig user test

To understand the user better and have a platform to fuel discussion, where values such as force, resistance, angles, etc could be compared, a user test was held at CPAC with the test rigs. The test group consisted of 13 individuals. At the user test both open and closed questions was asked to give answers, but also to open up for a creative process in creating new ideas and solutions. The test was setup in a manner so that the test person got to test functions on the test rigs and convey their ideas and rate the function. Functions which were presented to the test persons are enumerated below.

- Adjustable resistance
- Different resistance between the X and Y-axis
- Feedback from sensors/warnings through haptic feedback in the joystick
- Detents from the neutral position in docking mode
- Throttle in the joystick where more pressure in Y-axis gives more throttle
- Throttle in the joystick where the distance from the center in Y-axis indicates how much throttle is applied
- Throttle in the joystick similar to cruise control
- Force feedback
- Bow thrusters controlled with the joystick
- The joystick restricts movements which are not possible (actuators are at max position, moving faster than the actuators etc.)

Questions regarding ergonomic aspects such as length of the joystick, range of motion, maximum feedback strength required, overall feeling and grip type were also inquired.

3.3 Requirement specification

The requirement specification gathers external laws/standards and internal requirements on the product. In a systematical manner the requirements are gathered and quantified both subjective and objective measures. All demands have a target range and how to measure the quantity. The requirements for this product was created with respect to the user tests and interviews.

3.4 Concept generation

The competitor analyses, users test, interviews and all work with test rigs have been a testing ground to come up with solutions to the wanted functions. No dedicated brain storming session was held, but creativity was present during the whole process. The solutions were compiled into a morphological matrix where they were combined and crossbred to create concepts.

To get a better overview, the joystick was broken down into smaller parts. Where concepts were generated for each part individually. The different parts were: Joint, X-axis, Y-axis and Z-axis and common features. Solutions were listed for each of the parts and then cross bred using a morphological matrix for each axis and the common features.

3.5 Concept selection

The created concepts were checked against the requirement specification and if clear deviation was found the concept was removed. The remaining concepts were put through a Pugh-matrix. If there was a concept clearly superior to the other concepts it was picked as the winner. If no concept was clearly superior the strongest concepts were put through a Kesselring-matrix to decide on a winning concept. After going through all the matrixes the winning concepts were checked once again against the preliminary requirement specification.

3.6 Prototype

In this section the methodology behind the development and building of the prototype will be presented. A CAD-model of the prototype was developed in Creo Parametric 7.0.2.0.

3.6.1 Motor selection

The motors were selected as a trade-off between motor size and motor torque. To achieve the best overall feeling in the joystick friction needs to be minimized and thus as small gear reduction as possible to not have a large torque to backdrive the motor. Thus a large as possible motor was selected allowed by the packaging constraints.

3.6.2 Gear ratio selection

The gear ratio was chosen in such a manner that the selected DC-motor and stepper motor achieved the wanted maximum torque from the requirement specification. A balance between motor size and the gear ratio needed to be made. To make the gear reduction as compact as possible a single step gear reduction was sought after.

3.6.3 Electric BDC-motor control

A microcontroller, *Arduino Uno*, was utilized together with a motor control shield to control the electric BDC-motor. To gain positional control a hall-effect sensor was placed on the x-axis reading the position of the joystick.

3.6.4 Material selection

Materials were selected in accordance to the stiffness requirement, strength and the complexity of the given part. Thus a part of a given complexity might need to be 3D-printed when taking into regards limitations such as manufacturing methods available and time etc.

3.6.5 Ergonomic considerations

In order to help design the joystick to be more ergonomic a model of a hand was placed in the CAD-assembly. The hands used was the 50th percentile men, and 50th percentile women in Sweden.

3.6.6 Design for manufacture considerations

The prototype was intended to be built in-house so necessary adaptations to the design to fit the available manufacturing equipment was made. The tools available in-house were lathes, mills, 3D-printing and some welding equipment and thus the design was made with these tools in mind for manufacturing.

3.6.7 Structural analysis of joystick joint setup

The joystick joint was structurally analyzed using the Ansys workbench 2021 R1. A static structural simulation was setup to analyze the stiffness, the torque transferring capabilities and to verify the mechanical design. Two cases were tested; an impact case and a torque applied on the surface where the actuators apply torque. The model was meshed with the base size of 2.5 mm and a refinement to 1 mm near boundary conditions/where large deformations were expected, see figure 3.4 for the meshed model. Material data was set according to the prototype, see table 3.3. Contacts were modelled either as bounded or frictionless depending on where in the model, e.g. the bushings against the shafts are modelled as frictionless. Note that the coordinate system in the figures of the analysis figures are transformed versus the coordinate system definition introduced in chapter 2.1. All references towards a coordinate system refers to the coordinate system definition introduced in chapter 2.1.

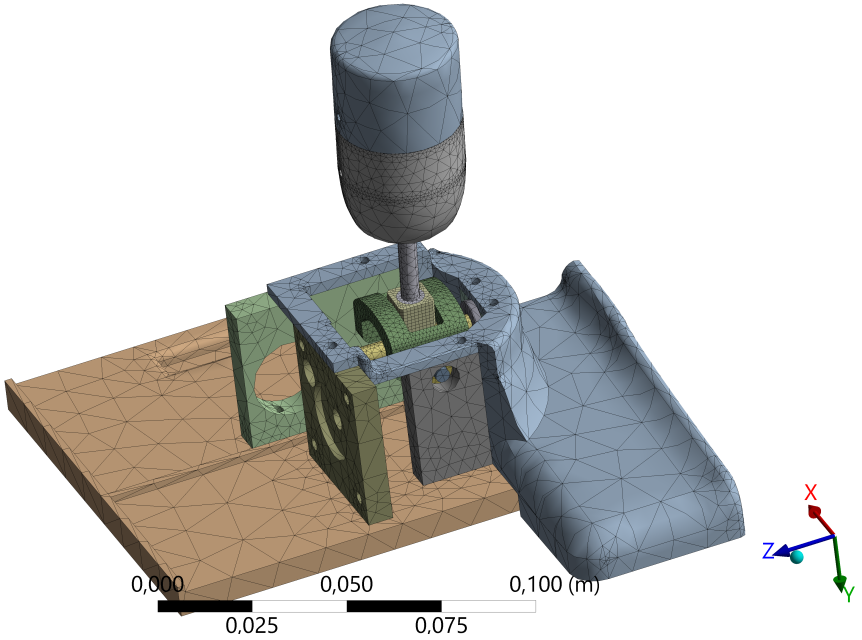

Figure 3.4: *The mesh for the structural analysis with a base size of 2.5 mm and refined areas with 1 mm*

Table 3.3: Material data used in the analysis

Generic steel Young's modulus	$2 * 10^{11}$ Pa
Generic steel ultimate strength	$2.5 * 10^{8}$ Pa
Aluminium alloy 2024 Young's modulus	$7.1 * 10^{10}$ Pa
Aluminium alloy 2024 ultimate strength	$1.8 * 10^{8}$ Pa
PET Young's modulus	$2.9 * 10^{9}$ Pa
PET ultimate strength	$5.7 * 10^{7}$ Pa

3.6.7.1 Structural analysis impact loading case

The impact loading case in X-direction consists of a force in the X-direction of 350 N and fixed supported at the shafts of the axis and the baseplate.

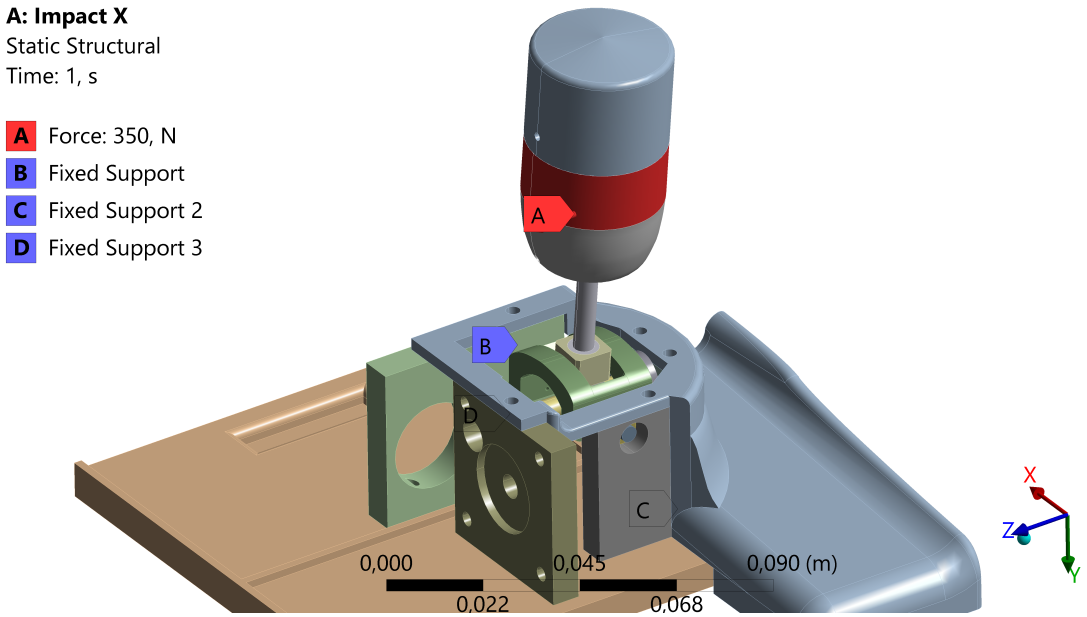

Figure 3.5: *Boundary condition setup impact X-direction*

The impact loading case in Y-direction consists of a force in the Y-direction of 350N and fixed supported at the shafts of the axises and the baseplate.

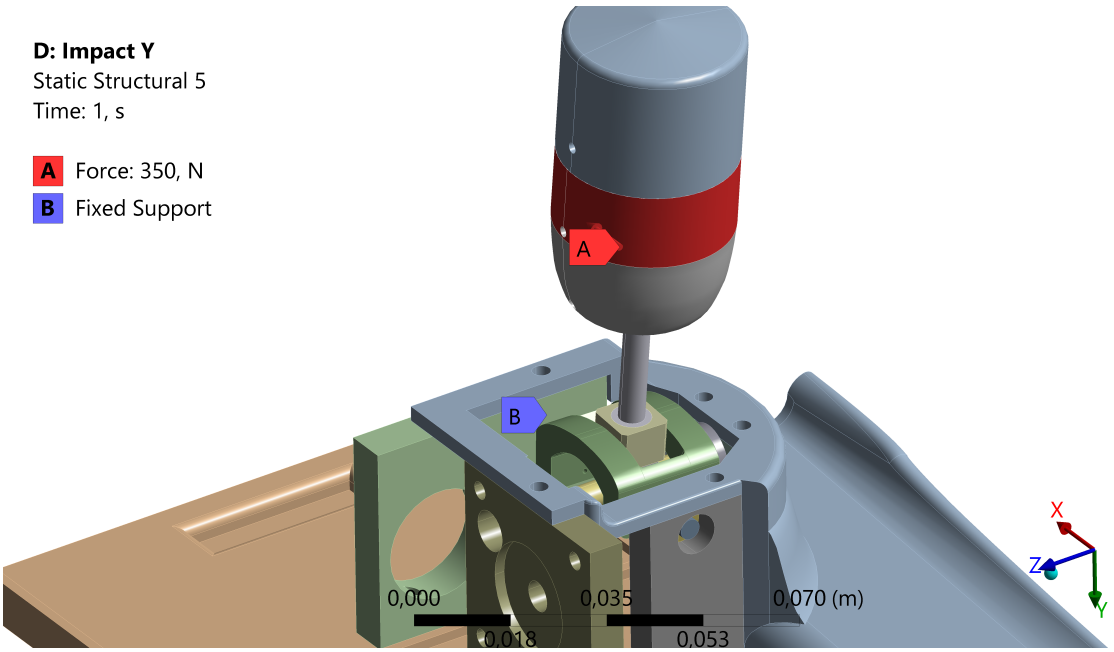

Figure 3.6: *Boundary condition setup impact Y-direction*

3.6.7.2 Structural analysis torque loading case

The torque load case on the X-side of the actuation consists of a torque of 1 Nm applied to the X-axis and fixed support on the Y-axis as well as the baseplate. The loading case of 1 Nm was chosen to be able to scale the results within the linear region.

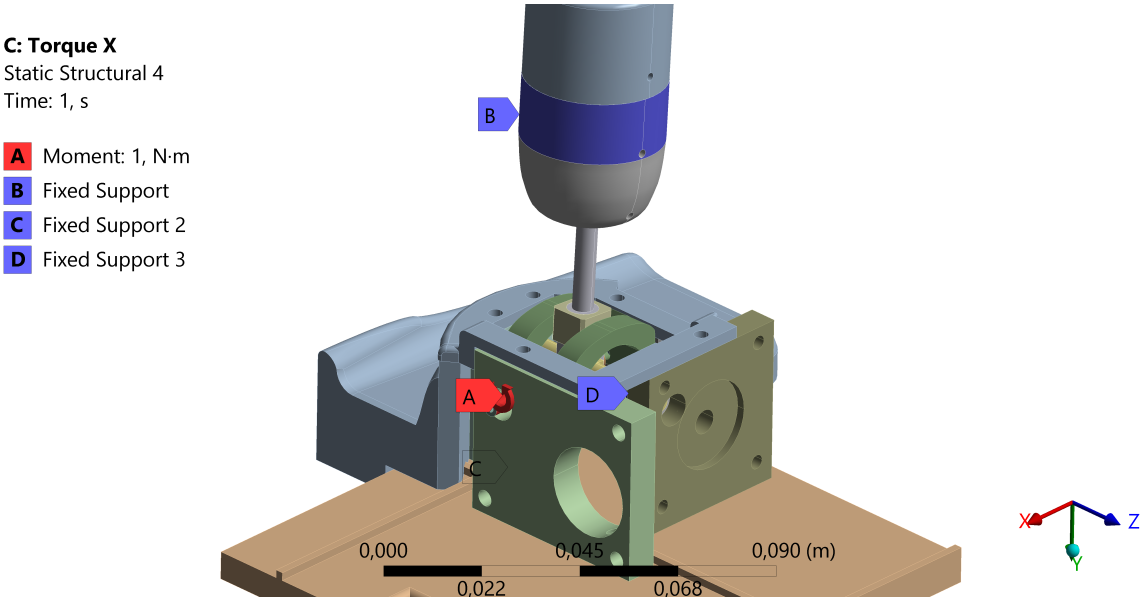

Figure 3.7: *Boundary condition setup torque X-direction*

The torque load case on the Y-side of the actuation consists of a torque of 1 Nm applied to the Y-axis and fixed support on the Y-axis as well as the baseplate.

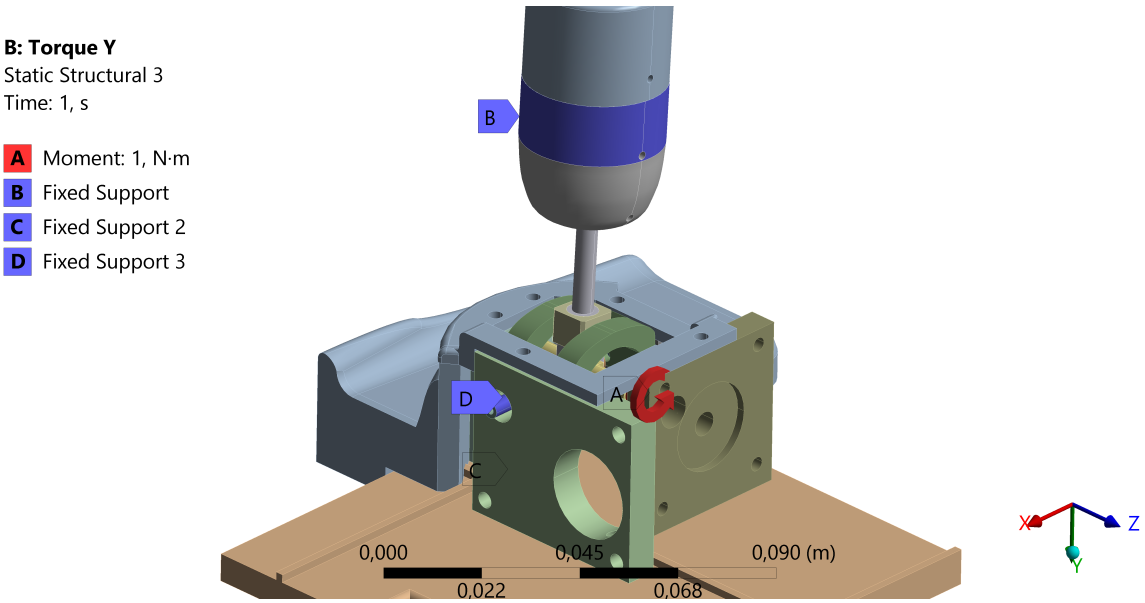

Figure 3.8: *Boundary condition setup torque Y-direction*

3.7 Testing of prototype

In order to validate the prototype a test group was formed to perform a user test and testing to see the fulfilment of the requirement specification.

3.7.1 User test on prototype

A questionnaire was developed to measure the users experience and grade how well the prototype solved the problems. The questions can be found in table 3.5. Majority of the questions are designed for the user to give a value of 1-5 where five is considered the best with a few open questions for the user to express opinions about

the prototype. The questionnaire test a few different scenarios whilst using the joystick, the cases are presented in table 3.4. The Arduino was programmed to simulate these conditions and the user had to imagine being in a boat whilst testing.

Table 3.4: User test cases

No:	Case:	Mode:
1	Maximum actuation is reached/ 90% is reached	Docking mode
2	The joystick is moved faster than the actuator(s) can move	Docking mode
3	Feeling in high speed maneuvering	Driving mode
4	Haptic feedback whilst docking with surround sensors	Docking mode
5	Transition from docking mode to driving mode	Both
6	Transition from driving mode to docking mode	Both
7	Changing of engine speed	Driving mode
8	Changing of gear	Driving mode

Table 3.5: Prototype user test questionnaire

Question:	Grading:
How clear is it what amount of actuation is applied?	1-5
Does the haptic feedback help?	(Yes/No)
Is it clear when the actuator is in position or not?	1-5
Does the feeling in the joystick invite you for high speed driving?	1-5
How clear is it what you should do to avoid collision?	1-5
How much do you like the solution from switching from docking mode to driving mode? Do you think it will work?	1-5
How much do you like the solution switching from driving to docking mode? Do you think it will work?	1-5
How intuitive is the gear changing?	1-5
How much do you like the gear changing solution?	1-5
How intuitive is the RPM changing?	1-5
How do you like the range of motion of the joystick?	Open question
How do you like the size of unit and stick?	Open question
Would you like to use this product for many hours a day?	Open question

The test panel consisted of 10 people with experience developing marine applications.

3.7.2 Requirement specification fulfilment

To measure how well the prototype fulfills the demands set in the requirement specification tests were conducted to measure requirement fulfilment. The dimensions were measured by a steel ruler. To measure the forces the actuators can produce on the joystick a dynamometer was attached to the joystick and held tangentially to the motion. The force was then translated into a torque via the attachment point on the joystick.

4 Results

In the following chapter the results are presented.

4.1 Evaluation of joysticks on the market

There are a limited amount of force feedback joysticks on the market today, and the ones that exists were out of budget for this project. Therefore one normal joystick for marine vessels without force feedback was evaluated, and one older second hand force feedback gaming joystick.

4.1.1 Evaluation of current CPAC joystick

During the testdrive one could conclude that driving a boat with the CPAC/Penta joystick is a nice and intuitive experience. The feeling in the stick was smooth, and the resistance it provided felt good while docking, but there is also room for development and improvements. The first thing that was noticed was the lack of response from the stick on how much input one was giving while being in docking mode, and there was no indication before hitting the end stops. Second thing was the transition between docking and driving mode being a bit awkward, since one had to let go of the joystick, push a button, engage the gear with the throttle/gear controller, set the throttle and then being able to steer with the joystick again. This also resulted in unnecessary movements of the boat. Third thing was noticed while steering in high speed. The boat felt nervous, it was intuitive to be careful while initiating and holding a turn, but too easy to let the stick back to neutral position too fast, which resulted in a furious maneuver.

The authors found, except for earlier mentioned, a number of things to discuss further, which are listed below:

- Possibility to operate the thrusters while docking, to move only the bow of the boat
- Some kind of indication that the end stop is close by
- Feedback about delays och the actuators, since the stick can be moved a lot faster than the pods/drives can turn
- Damping in the stick
- Adjustable resistance
- Possibility to operate gear changing and throttle also in driving mode.

During the disassembly of the CPAC/Penta joystick one could see that it is a well built, simple and robust joystick. The joystick joint was of ball-type which will not be applicable for a force feedback joystick, due to the lack of torque transfer ability.

Numbers from measurements of the CPAC/Penta joystick are listed in table 4.1.

Table 4.1: CPAC Systems joystick parameters

Overall case dimensions X,Y,Z [mm]	100,100,55
Length of joystick above base [mm]	90
Motion arc X and Y [mm]	65
Range of motion X-axis [°]	± 19
Range of motion Y-axis [°]	± 19
Range of motion Z-axis [°]	± 37

4.1.2 Evaluation of gaming force feedback joystick

While evaluating the Logitech Cyborg Evo Force joystick with the Logitech test software it was possible to adjust stiffness and damping. It was a clear difference in feeling between the values of damping and spring stiffness. The feeling in the stick was nice. It moved smooth, even with the high values of stiffness, and it pushed with impressive force when the demo programs were tried.

The joystick joint consisted och two half bowl shaped parts with slots, acting as bridges, one of the halves had the slot in Y-direction, and the other one had the slot in X-direction. Through the slots went the joystick shaft. The slots made it possible for the shaft to lean in both X and Y direction. From the bridges was shafts connected to a gear train, that was connected to BDC-motors. All parts was made of plastic, also the bearings. It was all well covered in grease. For determining the position of the stick, two optical encoders were fitted on each motor. Each encoder had two sensor elements to be able to detect direction.

A special kind of grease was found in the analog throttle mechanism, a sticky high viscosity grease that gave a nice feeling to the throttle lever.

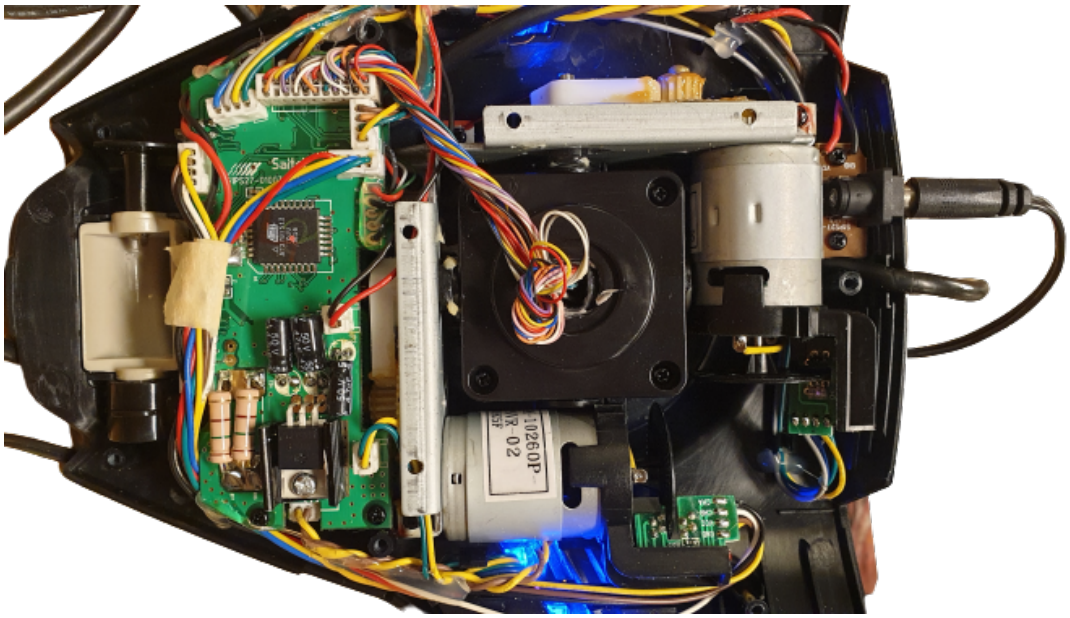

Figure 4.1: *Logitech Cyborg Evo Force joystick mechanical solution*

Specifications from measurements on the Logitech Cyborg Evo Force joystick are listed in table 4.2

Table 4.2: Logitech gaming joystick parameters

Length of joystick	160
Motion arc X and Y [mm]	180
Max motor torque [Nm]	0.043
Gear ratio [-]	1:24.725
Gear material [-]	Plastic

4.2 Testing of solutions on test rigs

In this section the findings from testing solutions on the test rigs are presented with the drawbacks and strengths found. They were all tested against the functions connected to the purpose of this thesis. The built test rig without any actuators attached is illustrated in figure 4.2.

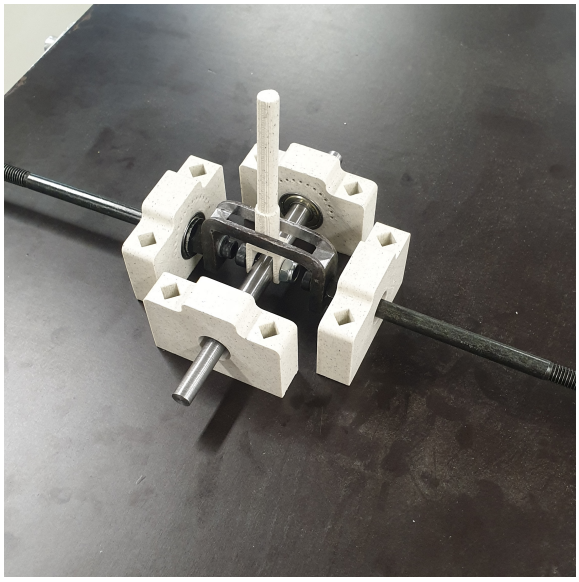

Figure 4.2: *Finished test rig without any actuators attached*

4.2.1 Brushed DC-motor as actuator for resistance and feedback

The brushed DC-motors proved to be easy to control, provide ample enough of torque in a reasonable packaging for a marine joystick. The DC-motors were attached to the rig axes through a gear train, with a gear reduction of 1:25. By controlling the motors with a PWM-signal, different amounts of force could be applied on the stick. The feeling they provided was smooth, not springy, but a more dampend resistance than the spring solutions. The motors was also tried on the rig with position sensors, to, with help of an Arduino and a motor shield, try functions where the motors gave different amount of torque at different positions of the joystick travel. In this way, also a detent function could be tried. The function fulfilment of brushed DC-motor acting as actuator for both resistance and feedback is tabulated in table 4.3.

Table 4.3: Function fulfilment brushed DC-motor

Function	**Fulfilled**
Make it possible to feel when the steering actuators are in desired position and when the propelling actuator is engaged.	X
Notify if maximum actuation is reached.	X
Avoid furious maneuvers while driving at high speed, but still be able to avoid accidents.	X
Enable cruise control/trolling mode.	X
Give notifications and warnings	X
Low versus high speed maneuvering, giving different feedback and the possibility for progressive resistance.	X
Give the possibility for the operator to feel what mode is engaged.	X
Help the operator to seamlessly change driving mode	X
Give the same basic functions as the joystick of today	X

4.2.2 Stepper motors

During the work with the test rigs there was not any stepper motor available to test with. Thus table 4.4 is based on the theoretical framework in chapter 2.4.

Table 4.4: Function fulfilment stepper motor

Function	**Fulfilled**
Make it possible to feel when the steering actuators are in desired position and when the propelling actuator is engaged.	X
Notify if maximum actuation is reached.	X
Avoid furious maneuvers while driving at high speed, but still be able to avoid accidents.	X
Enable cruise control/trolling mode.	X
Give notifications and warnings	X
Low versus high speed maneuvering, giving different feedback and the possibility for progressive resistance.	X
Give the possibility for the operator to feel what mode is engaged.	X
Help the operator to seamlessly change driving mode	X
Give the same basic functions as the joystick of today	X

4.2.3 Spring for resistance with a mechanism allowing one spring to provide resistance in both +/- direction

The mechanism contains three parts; One cam profile fixed on the joystick axle, one rocker arm with a small wheel acting on the cam, and one spring in the end of the rocker arm, providing tension. To get the same lift in both directions, the cams had to be asymmetric, or the resistance in direction towards the turning point of the rocker arm would have been higher then in the other direction see figure 4.3.

Many different cam profiles were tested, different lengths of rocker arms and different springs. A good combination was found after several iterations. The final combination gave a nice feeling with a small center detent and progressive increasing resistance. The feeling was less springy than with directly actuating springs.

An interesting feature with this solution is that multiple cams can be fitted on the same axle, together with rocker arms. By engaging or disengaging the rocker arms respectively, different modes and/or feelings in the stick can be achieved.

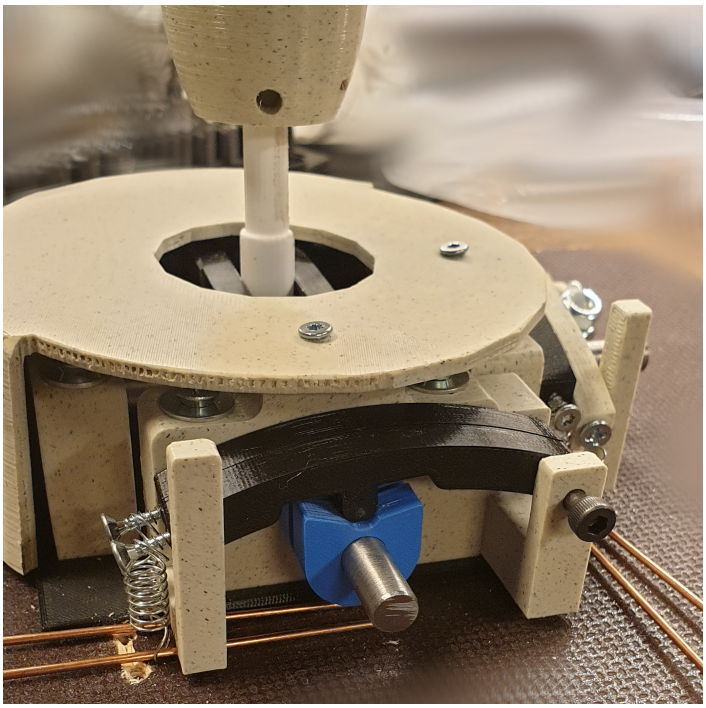

Figure 4.3: *Illustration of the single spring concept*

In table 4.5 the function fulfilment of the cam-solution is tabulated.

Table 4.5: Function fulfilment spring solution with cams

Function	Fulfilled
Make it possible to feel when the steering actuators are in desired position and when the propelling actuator is engaged.	-
Notify if maximum actuation is reached.	X
Avoid furious maneuvers while driving at high speed, but still be able to avoid accidents.	X
Enable cruise control/trolling mode.	X
Give notifications and warnings	-
Low versus high speed maneuvering, giving different feedback and the possibility for progressive resistance.	X
Give the possibility for the operator to feel what mode is engaged.	X
Help the operator to seamlessly change driving mode	X
Give the same basic functions as the joystick of today	X

4.2.4 Double springs

It was a good feeling of resistance when applying one spring, in one direction. But when the opposite counter spring also was attached on the rig, it was hard to tension them equal and give the stick a center position. It was also hard to not get interference from the slacking spring. With two springs, the feeling became springy.

Table 4.6: Function fulfilment double spring

Function	Fulfilled
Make it possible to feel when the steering actuators are in desired position and when the propelling actuator is engaged.	-
Notify if maximum actuation is reached.	-
Avoid furious maneuvers while driving at high speed, but still be able to avoid accidents.	X
Enable cruise control/trolling mode.	X
Give notifications and warnings	-
Low versus high speed maneuvering, giving different feedback and the possibility for progressive resistance.	-
Give the possibility for the operator to feel what mode is engaged.	-
Help the operator to seamlessly change driving mode	-
Give the same basic functions as the joystick of today	X

4.2.5 Rubber band

Rubber bands were small and easy to attach on the rig, they gave a nice feeling of resistance and is probably a good option for a prototype, when wear is not an issue. The function fulfilment is tabulated in table 4.7.

Table 4.7: Function fulfilment rubber band

Function	Fulfilled
Make it possible to feel when the steering actuators are in desired position and when the propelling actuator is engaged.	-
Notify if maximum actuation is reached.	-
Avoid furious maneuvers while driving at high speed, but still be able to avoid accidents.	X
Enable cruise control/trolling mode.	X
Give notifications and warnings	-
Low versus high speed maneuvering, giving different feedback and the possibility for progressive resistance.	-
Give the possibility for the operator to feel what mode is engaged.	-
Help the operator to seamlessly change driving mode	-
Give the same basic functions as the joystick of today	X

4.2.6 Magnetic friction brake

The tested magnetic brake was of friction type, with a diameter of 50 mm, and 35 mm of thickness. It was easy to control, as the force is directly linear to the voltage applied. The feeling from the braking was nice and smooth. It was good at giving resistance, but could not give feedback in the form of pushing back. It was also a bit too slow to give a nice feeling in digital detents. With no high friction material, just steel, the brake could provide a resistance of 1.1 Nm. With another material on the disks, the braking force can be higher, but maybe not as smooth. The function fulfilment for the magnetic friction brake is tabulated in table 4.8.

Table 4.8: Function fulfilment magnetic friction brake

Function	**Fulfilled**
Make it possible to feel when the steering actuators are in desired position and when the propelling actuator is engaged.	X
Notify if maximum actuation is reached.	X
Avoid furious maneuvers while driving at high speed, but still be able to avoid accidents.	X
Enable cruise control/trolling mode.	X
Give notifications and warnings	-
Low versus high speed maneuvering, giving different feedback and the possibility for progressive resistance.	X
Give the possibility for the operator to feel what mode is engaged.	X
Help the operator to seamlessly change driving mode	-
Give the same basic functions as the joystick of today	-

4.2.7 Grease damper

The grease damper was built as one smaller cylinder being fixed on the axle, rotating inside a larger cylinder that is fixed on the rig. between the small and large cylinder is a small gap that is filled with grease. Different sizes of gap was tried, and it was found that the smallest gap of 0.5 mm gave the most resistance. Between the two different kind of grease that was tried, it was found that the Nyogel 767A gave many times the resistance, and more damping, than the multi grease one. The grease damper did not solve any of the functions for the joystick on its own but served to provide a better feeling.

4.2.8 Solenoids, directly actuating

Solenoids have a short working range compared to their overall size. Most solenoids on the market are either pull or push and the other direction is normally pushed back by a spring mechanism or something similar. Thus DC solenoids are normally working between two position and not a steplessly between two positions. To achieve the positional control for the joystick either two opposing solenoids are required or a special solenoid which can both push and pull. To control the position accurately deemed difficult as the solenoids did not exhibit a linear behaviour when applying a PWM signal. This concludes too that solenoids were not suitable for direct braking of the stick movement, or force feedback. It was suitable for making shaking and buzzing in the stick, but only within a limited range. A working solution was not managed to be developed for the test rigs. The theoretical functional fulfilment if the solution would be made operational is tabulated in table 4.9.

Table 4.9: Function fulfilment DC solenoids, directly actuating

Function	Fulfilled
Make it possible to feel when the steering actuators are in desired position and when the propelling actuator is engaged.	X
Notify if maximum actuation is reached.	X
Avoid furious maneuvers while driving at high speed, but still be able to avoid accidents.	X
Enable cruise control/trolling mode.	X
Give notifications and warnings	X
Low versus high speed maneuvering, giving different feedback and the possibility for progressive resistance.	X
Give the possibility for the operator to feel what mode is engaged.	-
Help the operator to seamlessly change driving mode	-
Give the same basic functions as the joystick of today	-

4.2.9 Solenoids, for engaging and disengaging of a spring mechanism

Solenoids are often used to engage and disengage mechanisms. On the rig, a solenoid was mounted in order to control a spring mechanism, called "Spring for resistance with a mechanism allowing one spring to provide resistance in both +/- direction" above. The solenoid tested was of pull-type which means that the solenoid is at the weakest point in the beginning of the stroke, and will finish at its strongest point, when it is fully contracted. This resulted in a firm lock of the solenoid when the spring was activated (Solenoid contracted), but it was hard to get it to lock, since the solenoid was to weak. The functional fulfilment of the solution of using solenoids for engaging/disengaging spring mechanisms is tabulated in table 4.10.

Table 4.10: Function fulfilment Solenoids, for engaging and disengaging of a spring mechanism

Function	Fulfilled
Make it possible to feel when the steering actuators are in desired position and when the propelling actuator is engaged.	X
Notify if maximum actuation is reached.	X
Avoid furious maneuvers while driving at high speed, but still be able to avoid accidents.	X
Enable cruise control/trolling mode.	X
Give notifications and warnings	X
Low versus high speed maneuvering, giving different feedback and the possibility for progressive resistance.	X
Give the possibility for the operator to feel what mode is engaged.	X
Help the operator to seamlessly change driving mode	X
Give the same basic functions as the joystick of today	X

4.2.10 Solutions not tested on test rigs

A few solutions were not tested because of clear drawbacks or too costly and was noticed before making it to the testing stage or. These solutions are enumerated below with a reason why they were unfeasible to test.

- Electric linear actuators - Expensive, hard to find in the required size
- Pneumatic actuators - Requiring a source for pressurized air
- Hydraulic actuators - Requiring a source for hydraulic pressure
- Brushless motors - costly, harder to implement than BDC-motors and no significant difference

4.3 User test test rigs

The need for more range of travel compared to the existing solution today were expressed by a number of test subjects, some attribute this to when adding "digital functions" to the joystick even more range of travel is required. The test rigs during the user test had 40° of travel in X and Y-axis. The length of the joystick was deemed suitable by all candidates asked as well as the finger grip type. For maximum feedback strength it was

deemed suitable however some imagined if driving the boat under stormy conditions that even more resistance might be necessary and compared to grabbing on to a steering wheel to feel comfortable.

During the interviews some test subjects expressed open answers and ideas. A summary of the most important and relevant ones are listed below:

- Seamless or automatic transition between docking and driving.
- Hard to see the buttons on the joystick of today, since the user is covering them with the hand.
- More flexibility is highly wished for, also when it comes to the height and shape of the stick
- The joystick of today have ha motion pattern of a circle, which can feel weird if used as a driving stick.

4.4 User needs

The needs of the users were summarized and a rated importance based on the user test is tabulated in table 4.11. The importance to the user is rated 1-5 with 5 being most important. To summarize the most important needs of the user is that the joystick functionality of today in docking mode is appreciated and rated high with a 5. The need to control the throttle in the input device as well as change the gear was a main priority also rated 5. To incorporate haptic feedback and adjustable resistance was equally important and rated 5.

Table 4.11: User needs summarized with rated importance to the user

No.	Mode:	Need:	Importance:
1.	Docking mode	Indicate gear engaged/engines are in correct position	4
2.	Docking mode	Indicate how much throttle/steering input is left to demand	3
3.	Docking mode	Indicate danger or fault and the direction of where the danger is	4
4.	Docking mode	Only allow possible movement. The joystick should not allow faster movement than the pods can turn	4
5.	Docking mode	The possibility to activate the thruster(s) directly from the joystick	3
6.	Docking mode	Steering the boat with the same overall functionality as the product today	5
7.	Joystick driving	The joystick indicates gear engaged	3
8.	Joystick driving	Indicate turbo/compressor is about to be engaged	2
9.	Joystick driving	Indicate economy mode active	2
10.	Joystick driving	Indicate faults of the boat	4
11.	Joystick driving	Hybrid mode	
12.	Joystick driving	Control throttle input	5
13.	Joystick driving	Steering the boat	5
14.	Joystick driving	The resistance of the joystick is adjustable by the user	5
15.	Joystick driving	The resistance in the joystick is dependant on speed/RPM/Throttle input	4
16.	Joystick driving	The joystick can control the autopilot	4
17.	Both	Different feeling between joystick driving and docking mode	5
18.	Both	Force feedback	
19.	Both	Extended range of motion	4
20.	Both	Different range of motion for different modes	3
21.	Both	Seamlessly transfer from docking mode to driving mode	4
22.	Both	The ability to control infotainment system from the joystick	3

4.5 Joystick functions

In the following section the functionality of the prototype will be presented in how it conceptually solves the user needs in term of changing gears, throttle input etc. The joystick has two modes a "Docking mode" used at low speeds in docking situations and "Driving mode" which is intended for driving the boat at higher speeds.

4.5.1 Docking mode

The basic functionality in docking mode is regulated by ABYC [1] and the Swedish Institute for Standards [27]. If the joystick is moved in positive Y-direction the boat shall move forward and vice versa in reverse. If the joystick is moved in positive X-direction the boat makes a parallel movement without rotation to the right, and vice versa in negative X-direction to the left. Rotating the top of the joystick will rotate the boat around its mass center. A center detent from neutral can be added to make sure that the user does not unintentionally make a maneuver. In the coming sections the new functions to be used during docking will be presented.

4.5.1.1 Close to maximum actuation is reached

To notify the user when near maximum actuation is achieved a detent was added close to maximum. Where this detent is and how distinct it is can be altered by shifting the profile see figure 4.4. This restricts the user to unnecessarily apply to much power but if more power is needed the detent can be pushed through.

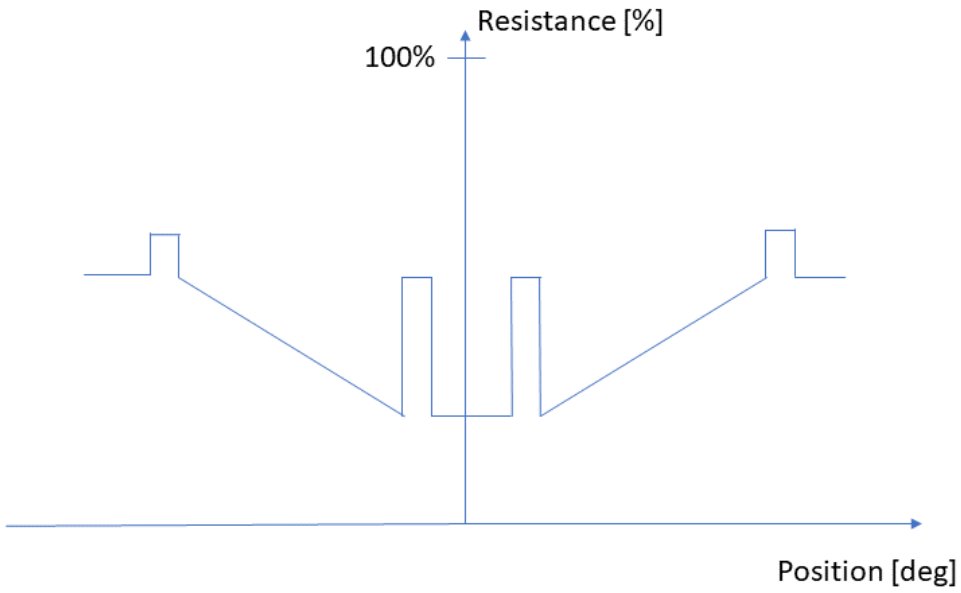

Figure 4.4: *Profile of resistance whilst in docking mode*

4.5.1.2 The joystick is moved faster than the actuator(s) can move

When the user tries to move the joystick faster than what is physically possible for actuators of the boat, resistance is added. For the prototype this was implemented as a resistance increase to the base resistance PWM_{base}. The increase was linear to the speed v of the joystick movement with a proportional gain P. Equation 4.1 illustrates the increase in PWM-value of the X-axis to the base profile displayed in figure 4.5.

$$PWM = PWM_{base} + P * v \tag{4.1}$$

The speed v was calculated according to equation 4.2 where X is the position, $X_{previous}$ the position in the previous sample and ΔT the sample time.

$$v = \frac{X - X_{previous}}{\Delta T} \tag{4.2}$$

In a real world implementation this would be regulated by the error between the setpoint from the joystick and the actual position of the actuator(s) with some proportional gain added.

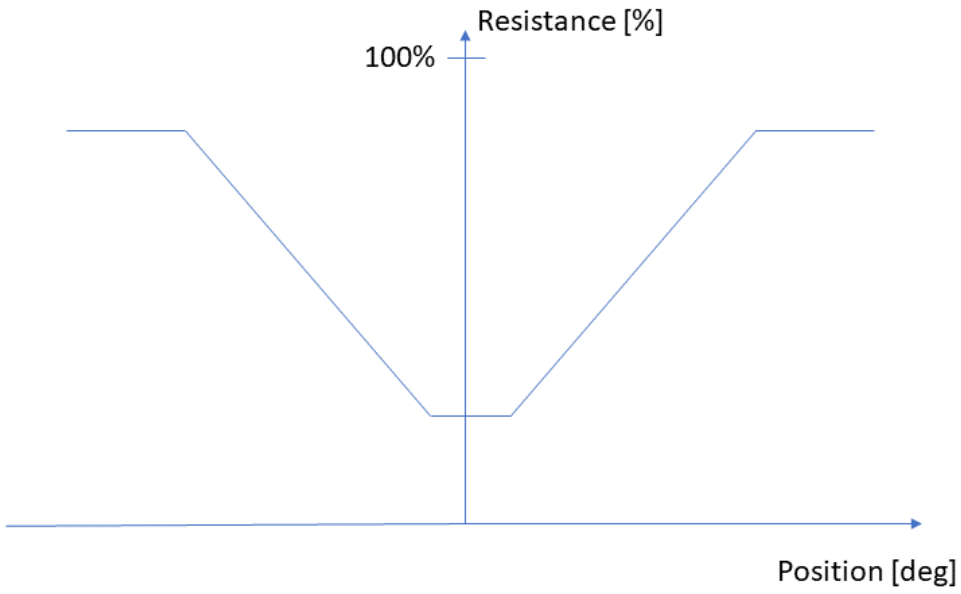

Figure 4.5: *Base profile PWM X-axis*

4.5.1.3 Docking mode with surround sensors

Whilst in docking mode and moving too close to an obstacle the joystick will push away from the obstacle indicating to the user to not move into the obstacle. The feedback was set at a level so that the user will notice the feedback but can "push through" it, if it is desired to push against something, like a bridge. The feedback implemented in the prototype is a pulse train of increased resistance, see figure 4.6. It was noticed from users that the relative amplitude between the pulse and the base resistance and frequency of the pulses were equally important in how noticeable the notification was.

4.5.2 Driving mode

In driving mode the functionality of the joystick needs to be different to invite for high speed maneuvering. In order to be a "all in one" solution the joystick needs to be able to control the throttle, gear operation, and the steering.

4.5.2.1 Feeling in high speed maneuvering

To achieve a better feeling whilst maneuvering in higher speeds the base resistance was increased and the resistance is proportional to the speed which the joystick is moved, in the same manner as equation 4.2. Thus a rash movement in high speed is not accidentally requested. The resistance is intended to increase with boat speed to emulate mechanically connected systems.

4.5.2.2 Throttle function and gear changing mechanism concept evaluation

Three concepts of realizing the throttle function was created and evaluated using a relative comparative matrix, a Pugh matrix see table 4.12. The solutions were tested on the test rigs to provide information for the Pugh matrix.

The first concept called *"Traditional big arc"* is similar to how a throttle lever functions on a boat today. When the joystick is in the neutral position the gear neutral is also in. Pushing the joystick forward through a detent engages the gear in forward with the engine(s) on idle speed. Pushing the joystick further forward increases

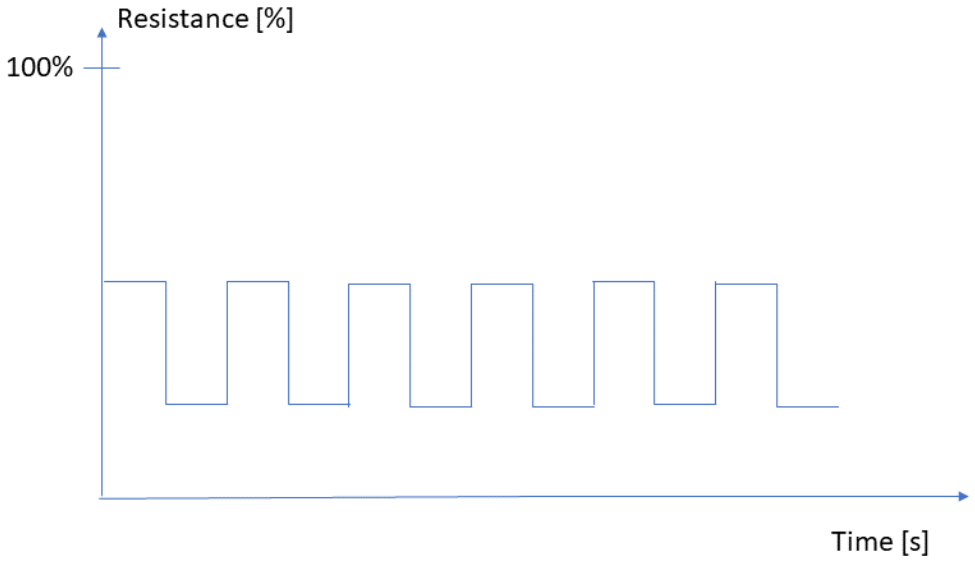

Figure 4.6: *The resistance in time domain when coming to close to an obstacle*

the throttle input and the joystick stops at the given throttle input. Reverse works in the same manner but the joystick is pulled aftward. The motion arc in Y-direction is significantly bigger than that of the X-axis to emulate a traditional throttle lever.

The second concept is called *"Returning throttle"*. To engage forward gear the joystick is pushed forward through a detent and it will move itself to half the motion range forward and stay there. To increase throttle it is pushed forward and then springs back and vice versa to deaccelerate. To disengage back into neutral the joystick is pulled backwards to the neutral positions through a detent. The reverse works in the same manner.

The last concept *"Traditional small arc"* is identical to the *"Traditional big arc"* however the motion arc is the same for the X and Y-axis.

In the Pugh-matrix the *"Traditional big arc"* was set as the reference to be compared against.

The result of the Pugh matrix is to continue develop the *"Returning throttle"* solution for the throttle. It's main advantages was the ergonomics, ease of seamless transfer between docking and driving mode whilst not being more mechanically complex than the compared solutions. In the following sections the developed concept will be presented.

4.5.2.3 Changing of gears and throttle function

Whilst in driving mode to engage the forward gear the joystick is pressed forward through a detent and the joystick will assume a new neutral position where the forward gear is engaged. To disengage the gear again to neutral the joystick is pulled backwards to where it is pointing straight upwards. To reverse the boat the joystick is pulled back instead of forward. The joystick will remain in this position and gear engaged until it is pushed back into neutral again. The forward gear and throttle function is illustrated in figure 4.7.

Table 4.12: Pugh matrix throttle function

Selection Criteria:	**Traditional big arc [REF]**	**Returning throttle**	**Traditional small arc**
Easy to give a specific throttle input from zero	0	-	-
Easy to fine tune throttle input	0	+	-
Clear indication of throttle input	0	-	-
Clear indication of driving mode	0	0	0
Safety	0	0	0
Ergonomics	0	+	+
Mechanical complexity	0	+	+
Ease of seamless transfer from docking to driving mode	0	+	0
Cost	0	+	+
Robustness	0	+	+
Intuitive	0	0	0
Aesthetically pleasing	0	0	0
Sum +'s	0	6	4
Sum 0's	12	4	5
Sum -'s	0	2	3
Net Score	0	4	1
Rank	**3**	**1**	**2**

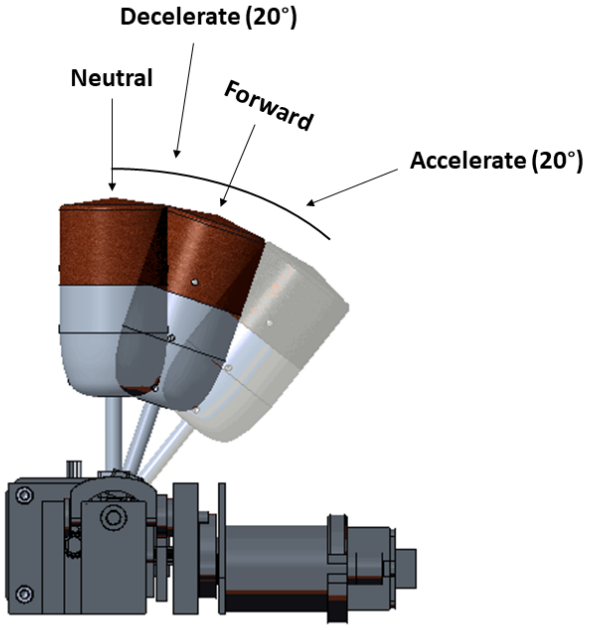

Figure 4.7: *Illustration of changing of gear in driving mode and throttle function*

To change the speed of the boat in driving mode the joystick is pushed forward or backwards in the Y-direction to increase or decrease speed. The joystick will then spring back to the forward gear engaged position and the speed of the boat be kept, like a cruise control. The mode works to either control boat speed in knots

or engine speed. Another possibility is if the joystick is pushed slightly forward or backwards the speed is increased/decreased a fixed increment. To reverse the joystick is pulled backwards and the functionality is the same.

4.5.3 Transition between modes

To transition from docking mode to driving mode a speed has to be kept for at least 5 seconds and after that a button on the top of the joystick pushed with a double click to engage driving mode. When driving mode is engaged the joystick will drive itself to the forward gear position. During the time it takes for the stick to drive itself to the forward gear position, the boat will keep the it had when the top button was pressed. To transition from driving mode to docking mode, the joystick is pulled to the neutral position. The button on top of the joystick is then pressed with a double click. The docking mode is engaged and the joystick will confirm with a short buzz.

4.6 Concept generation

It was found during the research of the user needs, and during testing of the actuators on the test rigs, that all joystick functions could be summarized under three parts: **Detent, Resistance and Feedback**. With resistance, detents and feedback, all requirements and functions could be fulfilled.

The concepts were created with help of the tables of functional fulfilment in chapter 4.2 where all solutions were tested individually on the test rigs. The solutions that individually could fulfill all functions were directly converted to a concept, while the other individual solutions were put together to create concepts that could fulfill all functions for respective axis.

4.6.1 Concept generation X-axis

The morphological matrix for the X-axis is tabulated in table 4.13 and lists the desired functions and subfunctions as well as possible solutions.

Table 4.13: Morphological matrix X-axis

Function:	**Solutions:**
Position sensor	Optical encoder, hall effect sensor, potentiometer
Resistance	spring, friction brake, electrical motor, spring with cam profile, solenoids changing spring pretension, magnetic brake, damper
Progressive increasing	
Increasing with speed	
Adjustable by operator	
Damping whilst returning	
Detents/click	Mechanical solution, electrical motor, solenoid, solenoid with slotplate
Clear neutral position	
Soft initiation of turn	
Force feedback	Solenoid, stepper motor, DC-motor

The solutions were combined into concepts, see table 4.14.

4.6.2 Concept generation Y-axis

The morphological matrix for the Y-axis is tabulated in table 4.15 and lists the desired functions and subfunctions as well as possible solutions.

Table 4.14: Concepts X-axis

No:	Resistance	Detent	Feedback
1	BDC-motor	BDC-motor	BDC-motor
2	Stepper motor	Stepper motor	Stepper motor
3	BDC motor + spring + damper	BDC-motor	BDC-motor
4	Solenoid	Solenoid	Solenoid
5	Solenoid	spring with cams	Solenoid
6	BDC-motor + spring	BDC-motor	BDC-motor

Table 4.15: Morphological matrix Y-axis

Function:	Solutions:
Position sensor	Optical encoder, hall effect sensor, potentiometer
Resistance	Spring, friction brake, electrical motor, spring with cam profile, solenoids changing spring pretension, magnetic brake, solenoids
Progressive increasing resistance	
Adjustable by operator	
Detents/clicks	mechanical solution, electrical motor, solenoid, solenoid with slot plate, sliding cams
Clear neutral position docking	
Clear neutral, forward and reverse indication	
Force feedback	Solenoid, stepper motor, DC-motor

The solutions were combined into concepts, see table 4.16.

Table 4.16: Concepts Y-axis

No:	Resistance	Detent	Feedback
1	Electric BDC motor + spring	Electric BDC motor	Electric BDC motor
2	Stepper motor + spring	Stepper motor	Stepper motor
3	Spring with cam profile + solenoid activating cams	Spring with cam profile + solenoid activating cams	Solenoid
4	Solenoids + spring	Solenoid	Solenoid
5	Electric BDC motor	Electric BDC motor	Electric BDC motor
6	Stepper motor	Stepper motor	Stepper motor
7	Electric BDC motor + spring with cam profile	Electric BDC motor	Electric BDC motor
8	Spring with cam profile + solenoid activating cam	Spring with cam profile + solenoid activating cam	Spring with cam profile + solenoid activating cam
9	Spring with cam profile + linear actuator for activation	Spring with cam profile + linear actuator for activation	Spring with cam profile + linear actuator for activation
10	Electric BDC motor	Spring loaded detent activated on the gear	Electric BDC motor
11	Electric BDC motor + spring	Electric BDC motor + separate panel for gear shift	Electric BDC motor
12	Electric BDC motor	Solenoid with slotplate	Electric BDC motor

4.6.3 Concept generation Z-axis

The morphological matrix for the Z-axis is tabulated in table 4.17 and lists the desired functions the possible solutions.

Table 4.17: Morphological matrix Z-axis

Function:	Solutions:
Position sensor	Optical encoder, hall effect sensor, potentiometer
Resistance	Spring, friction brake, electrical dc motor, stepper motor
Detens/clicks	Mechanical solution, electrical dc motor, stepper motor

The solutions were combined into concepts, see table 4.18.

Table 4.18: Concepts Z-axis

No:	Resistance	Detent
1	Stepper motor	Stepper motor
2	Spring	Mechanical solution
3	Electric DC motor	Electric DC motor
5	Spring	Brake

4.6.4 Concept generation common features

The created concepts for the common features are listed in table 4.19. Haptic feedback is included in case a solution for the X or Y-axis would not have been able to solve the function and a standalone solution for it would be needed (electrical motor on one of the axis is also included as a solution). Changing of driving mode could be solved entirely through software or require an addition to the mechanical solution.

Table 4.19: Morphological matrix common features

Function:	Solutions:
Haptic feedback	Electrical motor on one of the axis, electrical motor with unbalanced weight
Joystick joint	bridge
Changing driving mode	more throttle (simulated hardzone). push up/down the joystick. double click electric

4.7 Requirement specification

The strength requirements in the requirement specification comes from the ABYC [1] and SIS-standards [27], which is a 350N push against the end stops. The dimensional requirement of 120x150x70 mm [X,Y,Z] are set to allow for a packaging which is slightly bigger than that of CPAC's product today. To see the full requirement specification it is attached as appendix A.

4.8 Concept selection

The concept selection is presented in the following section, for each axle respectively.
There were many concepts in the loop for the X and Y-axis, but they can all be summarized as BDC-motor with or without add-ons like damper and springs, stepper motor with or without add-ons, and two half electric solutions with linear actuators or solenoids for engaging and disengaging of slot plates and cam profiles.

4.8.1 Concept selection X-axis

The generated concepts were first passed trough a Pugh matrix, presented in appendix B. The four best concepts were then taken to the Kesselring matrix seen below.

Table 4.20: Kesselring matrix X-axis concepts

		Concept 1	Concept 2	Concept 3	Concept 6
		DC-Mot	Stepper	DC+spri+dam	DC+spring
Selection criteria	Weight	Rating	Rating	Rating	Rating
Cost	3	5	2	3	4
Robustness	5	4	5	5	4
Easy to package	3	5	3	3	4
Adaptability for future functions	4	5	5	5	5
Robust feeling while using	5	4	4	5	4
Fail safe	5	5	5	4	4
Total score		135	125	133	124
Rank		1	3	2	4

4.8.2 Concept selection Y-axis

The generated concepts were first passed trough a Pugh matrix, presented in appendix C. The best concepts from the Pugh, together with at least one concept of each kind (At least one with BDC-motor, one with stepper motor, one with solenoid activation, and one with linear actuator activation) were but through a Kesselring matrix, seen below.

Table 4.21: Kesselring matrix Y-axis concepts

		Concept 1	Concept 6	Concept 8	Concept 9
		DC-Mot	Stepper	Cam+Sol	Cam+Lin
Selection criteria	Weight	Rating	Rating	Rating	Rating
Cost	3	5	3	2	1
Robustness	5	4	4	3	3
Easy to package	3	5	4	3	2
Adaptability for future functions	4	5	5	3	3
Smooth throttle selection	5	3	5	4	4
Robust feeling while using	5	4	5	4	4
Fail safe	5	5	5	3	3
Total score		130	136	97	91
Rank		2	1	3	4

4.8.3 Concept selection Z-axis

After the user test and interviews it was expressed that feedback in the Z-axis is not of high priority with the developed functions, and an active actuator for the Z-axis is not necessary. Other cons for an active actuator for the Z-axis is hard packing, cost and robustness. It was therefore decided to go with the only passive option, Concept no 2, spring with mechanic center detent.

4.8.4 Concept selection common features

Since the winning concepts for both X and Y-axis have active actuators that can provide feedback, no extra haptic feedback device is needed. Also the changing of driving mode depended on the choose of actuator in Y-direction, since the winning concept has a motor, the concept where the stick can drive itself will win. It is both the most intuitive and construction wise most simple solution.

The joystick joint will be of bridge type, since that is the only joint that has been in the loop that can actually transfer the required torque.

Two different kind of rotary sensors was tested for the X and Y-axis. Optical and magnetic (Hall) ones. The magnetic ones were superior since they could always provide an absolute position. Hence, magnetic sensors were chosen for the X and Y-axis. For the Z-axis, no magnetic sensor was found that could easily be implemented

(Custom PCBs would have been needed), and instead an analog rotary potentiometer was chosen for its robustness, size and simplicity, but with a lack of resolution.

4.9 Mechanical design of prototype

In this section the mechanical design of the prototype concept will be presented. In figure 4.8 the complete assembly of the model is illustrated.

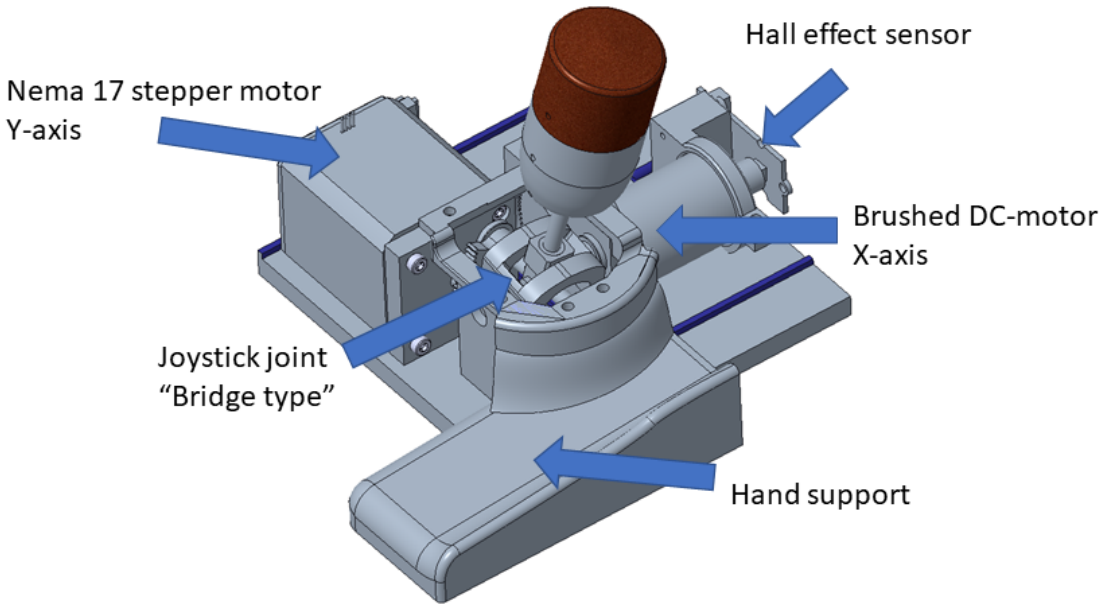

Figure 4.8: *CAD-illustration of the prototype*

4.9.1 Joystick joint

A completely new design was needed with demands on size and ability to transfer torque without significant deflection. The developed joystick joint is of a *”bridge-type”* where in x-direction the torque is transferred through a part similar to a bridge. For the Y-axis the joystick is connected directly to a shaft via a ”fork”.

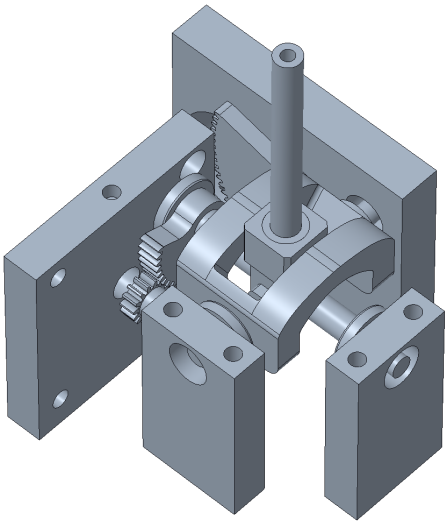

Figure 4.9: *The joystick joint in the prototype*

The resulting mechanism is similar to the design developed for the test rigs. The major difference is a sleave placed on the joystick shaft which will act as a plain bearing. This to avoid having a line contact between the joystick and bridge, see figure 4.10. The sleave will only rotate a few degrees for the travel of the joystick and slide against the bridge. The sleave is made from a durable plastic teflon which has excellent properties to be used as a bushing, it has a low sliding friction and high durability. The sleave is greased with a special high viscosity grease, Nyogel 767A, which will reduce the friction against the sliding surfaces and help provide a more robust feeling in the joystick.

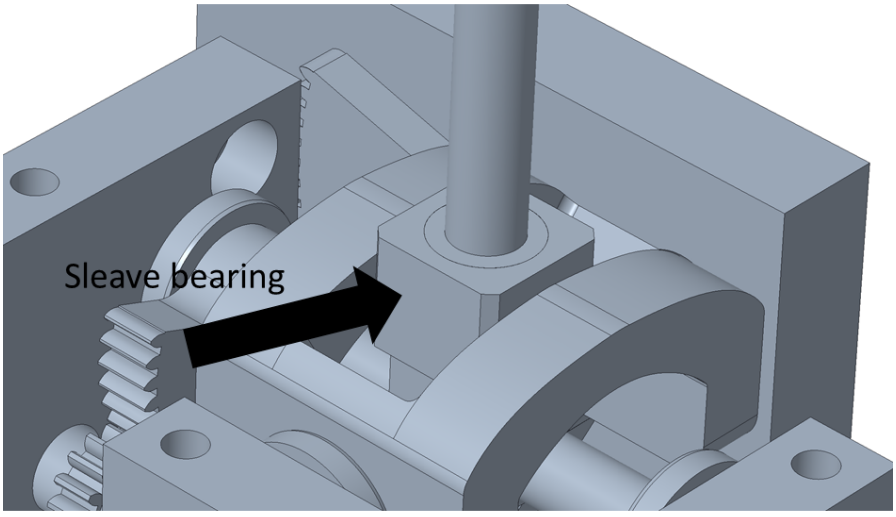

Figure 4.10: *The sleave bearing which rotates on the shaft and slides on the bridge*

The mechanism requires four bearings, holding the output shafts from the joystick joint. The chosen bearings are bronze brass bushings which have a low sliding friction and high static load capacity. The bearings will never see any significant rotational speed thus bronze brass bushings was chosen. The shaft are also connected to the gear reduction which transmits torque from the actuators. The bushings takes up both radial and axial load applied either from the actuators or the joystick. An exploded view of the joystick joint is illustrated in

figure 4.11 explaining the components of the joystick joint.

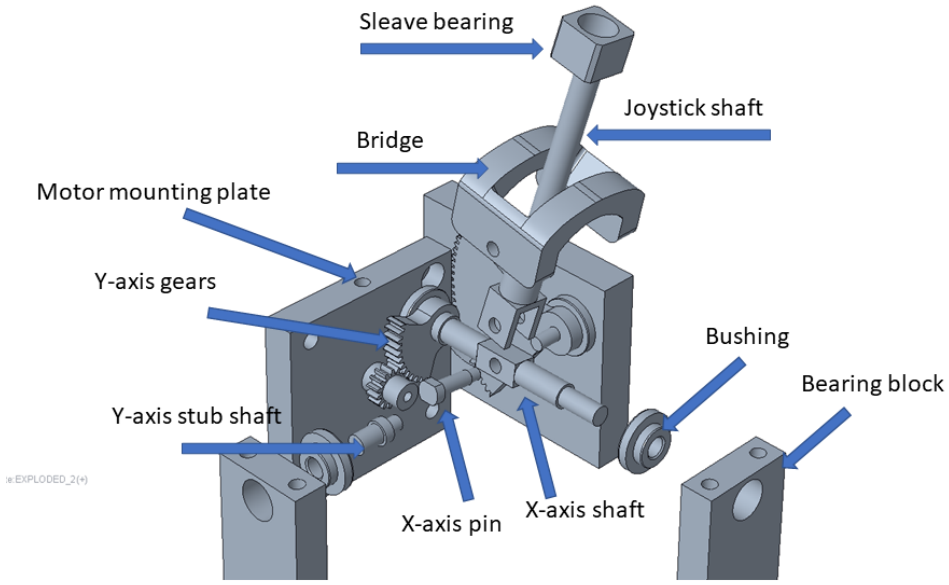

Figure 4.11: *Exploded view of the joystick joint*

4.9.2 Motion arc and range of motion

In order to have the same feeling in X and Y-direction whilst in docking mode it was decided to have the same motion arc. The motion arc of 80 mm was chosen based on the user tests on the test rigs and to not deviate to much from the existing solution. In figure 4.12 the motion arc and range of motion is visualized. The range of motion was extended to $\pm 30°$ in X-direction and $+40°/-30°$ in the Y-direction.

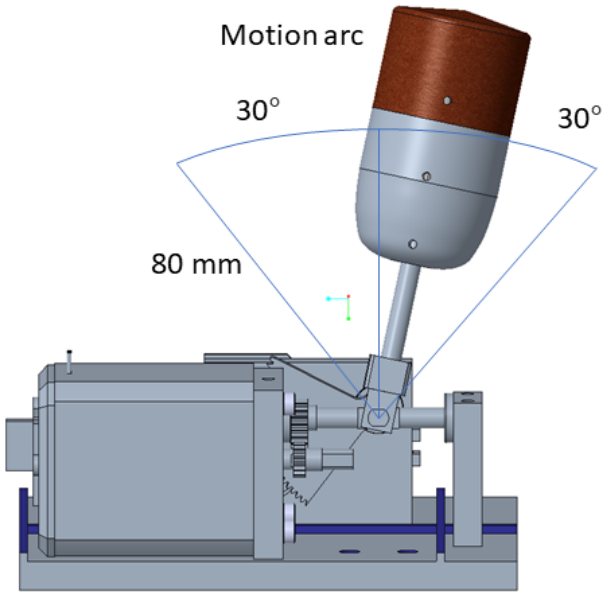

Figure 4.12: *Illustration of the motion arc*

The design has the ability to have different motion arc in X and Y-direction if wanted by lowering or raising the shaft connecting the joystick to the X-shaft. Which will increase or decrease the motion arc for the X-axis. To alter the motion arc of the Y-axis the height of the shaft and the bushings needs to be changed relative to where the hand interacts with the joystick.

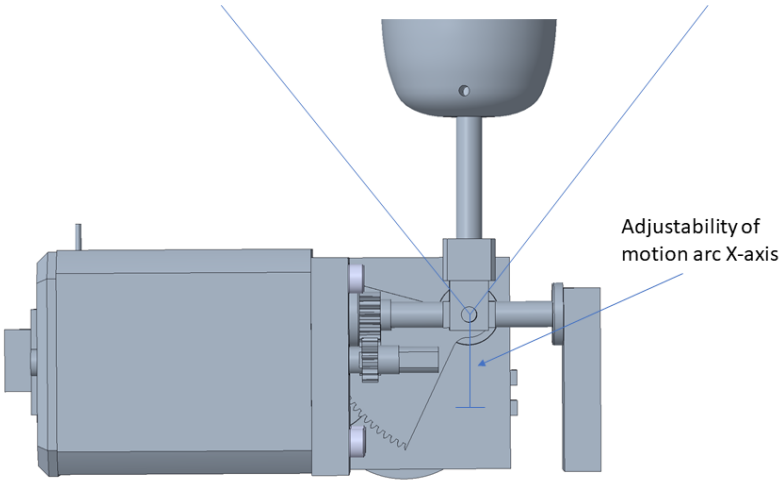

Figure 4.13: *Adjustability of motion arc*

4.9.3 Motion pattern

In order to be able to steer fully while applying full throttle in driving mode the motion pattern of the joystick was made to be rectangular see figure 4.14. The motion pattern can be made circular or any other desired shape within the rectangle via artificially created end stops by the actuators.

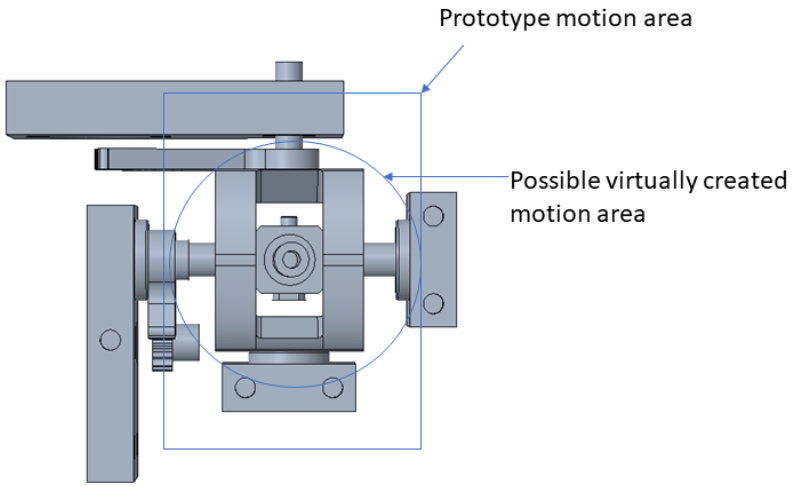

Figure 4.14: *The rectangular motion pattern of the prototype*

4.9.4 Z-axis design

The knob of the joystick consists of a base attached to the joystick shaft, and a twistable top. For a cross-sectional view illustrating the build-up of the knob see figure 4.15. Connecting the two parts and acting as position sensor is a rotary potentiometer with center detent. The resistance is provided by a torsion spring, painted black in figure 4.16. The ends of the spring is placed inside two slots in the base and between them a pin connected to the top part is acting. The size of the slots decides the travel of the top. The travel is designed to be 35 degrees. To keep all parts together, small set screws are used.

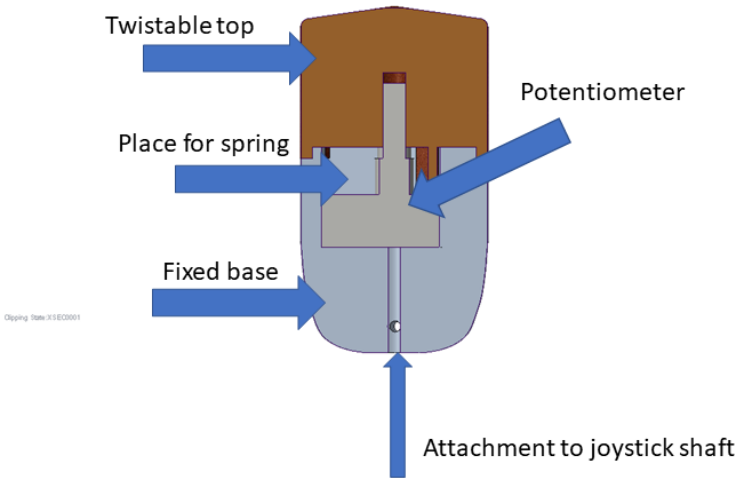

Figure 4.15: *Cross-section view of the knob*

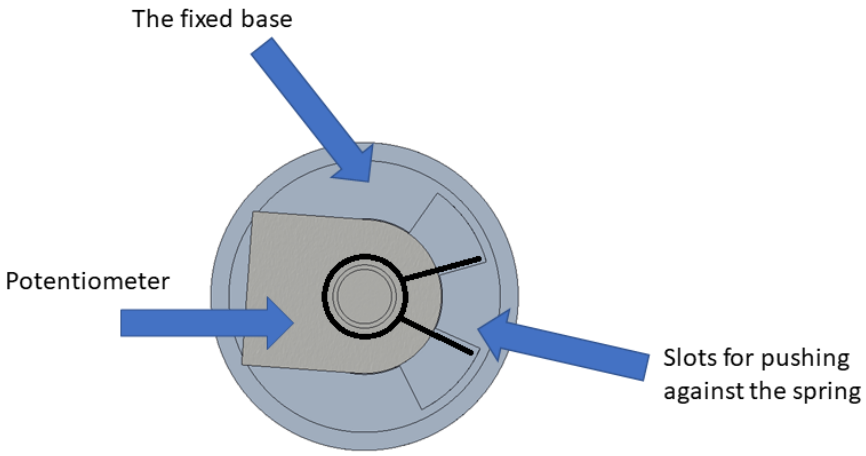

Figure 4.16: *Top view of the inside of the knob*

4.9.5 Choice of stepper motor

A bipolar stepper motor was chosen of Nema 17 size. With a motor torque of 0.56 Nm it has high torque in a suitable size for the prototype. Together with a 1:3 gear reduction the total torque on the joystick is 1.68 Nm. For full specifications see table 4.22.

Table 4.22: Nema 17 stepper motor specifications

Exterior size	42x42 mm
Motor length	48 mm
Motor torque	0.56 Nm
Step size	1.8 °
Rated current	1 A/phase
Highest allowed voltage	24 V

4.9.6 Choice of BDC-motor

A BDC-motor with a stall torque of 0.181 Nm was chosen. With a 1:11.4 gear reduction a maximum of 2.06 Nm of torque can be applied to the joystick. For the full specifications see table 4.23.

Table 4.23: BDC-motor specifications

Nominal voltage	7 V (operating range 6-12V)
Load speed	20400 RPM
Load current	1.8 A
Speed at maximum efficiency	19500 RPM
Current at maximum efficiency	4.7 A
Torque	0.026 Nm
Output power	47 W
Stall torque	0.181 Nm
Motor dimensions	50 x 35.8 mm (Lxø)

4.9.7 Choice of gear reduction and type

A gear reduction of spur gears was chosen in steel. Steel was chosen to be able to transfer more torque compared to plastic gears . The reduction for the BDC motor have 10 respective 115 teeth. The stepper motor have 15 teeth for the small gear and 45 teeth on the larger gear.

4.9.8 Sensor placement

With sensor redundancy one sensor is placed close to the joystick on the joystick shaft and one on the motor to achieve best overall performance. The mechanical solution provides mounting points on both the x and y-axis to read the position of the joystick. For positional control in the prototype only the sensor closest to the joystick was utilize .

4.9.9 Material selection and cost breakdown

The total cost, manufacturing method, material and estimated manufacturing time for the parts of the prototype are broken down in the table seen in Appendix D. In short the prototype is built out of 30 unique parts, excluding screws. 10 of these parts had to be bought, 9 was manufactured in steel and aluminium, the other 11 was printed in PETG plastic. Total build time was 21 hours, excluding printing. The total cost of the bought parts is 1736 SEK. The biggest cost is the stepper motor at 450 SEK, compared to the BDC-motor which costs 43 SEK.

4.9.10 Ergonomics considerations

The ergonomic considerations that was made, was about; Designing for the average sized male hand, but with adjustment possibilities to fit all hand sizes. Design the unit to let the hand be in resting position during as

many operations as possible. And don't let the hand reach extreme angles or positions during any operation.

The hand that was used as designing help in the CAD is an average sized hand. As can be seen in the picture 4.17, the hand will act just under the twist-able top when it is resting on the hand rest, this will reduce the risk of doing unintended twisting of the knob, and guide the user to use a finger grip. The hand rest of the prototype can be lowered 30mm, which opens up for 60mm wider hands, which reach the extremes. There is no upper limit for how high the hand rest can be placed.

The stick is placed in a corner, this will allow the hand to keep resting position also when the stick is operated far forward, since there is nothing obstructing the hand, as would be the case if the stick was to be placed in the center. With the hand rest in the correct height, the maximum actuation of 30 degrees will still feel natural and relaxed.

The design of the prototype was well received at the user test. The test subjects were especially happy with the hand rest and being able to operate the stick with a straight wrist, something that is not possible with the CPAC/Penta stick of today.

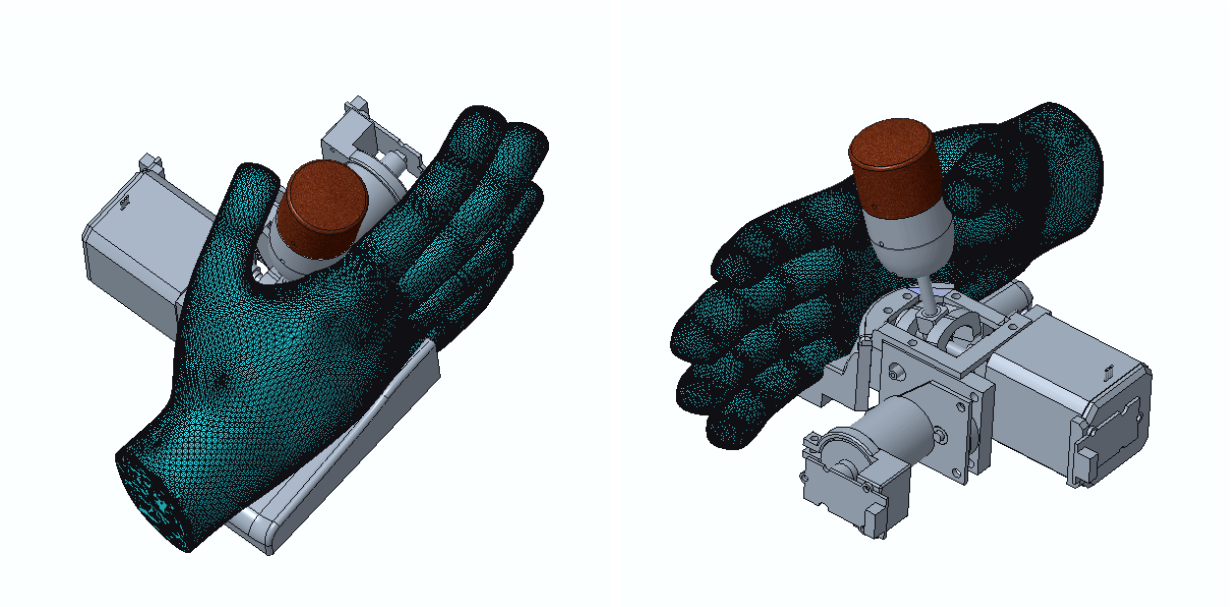

Figure 4.17: *The hand used in the joystick assembly used for help with ergonomics*

4.9.11 Structural analysis of the joystick joint

In this section the results from the structural analysis of the joystick joint are presented. Note that the coordinate system in the figures of the analysis figures are transformed versus the coordinate system definition introduced in chapter 2.1. All references made against a coordinate system refers to the coordinate system definition introduces in chapter 2.1.

4.9.11.1 Structural analysis impact loading case

In figure 4.18 the total deformation is presented for the impact case in X-direction. The max deformation is 7.4 mm at the top of the joystick. The deformations are displayed with a scale factor of 3.5.

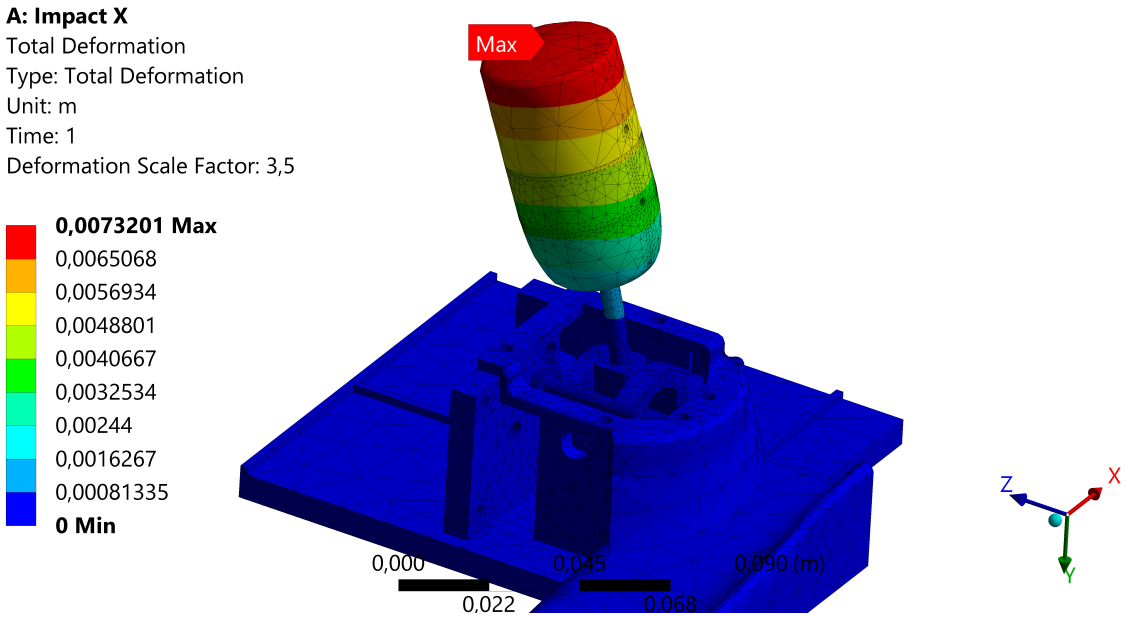

Figure 4.18: *Total deformation impact loading case X-axis*

In figure 4.19 the von Mises stresses are presented for the impact case in X-direction. The highest stresses are $1.5 * 10^9$ Pa which is above the ultimate strength of $2.5 * 10^8$ Pa . The max stress is found at the base of the joystick shaft where it meets the sleave bearing.

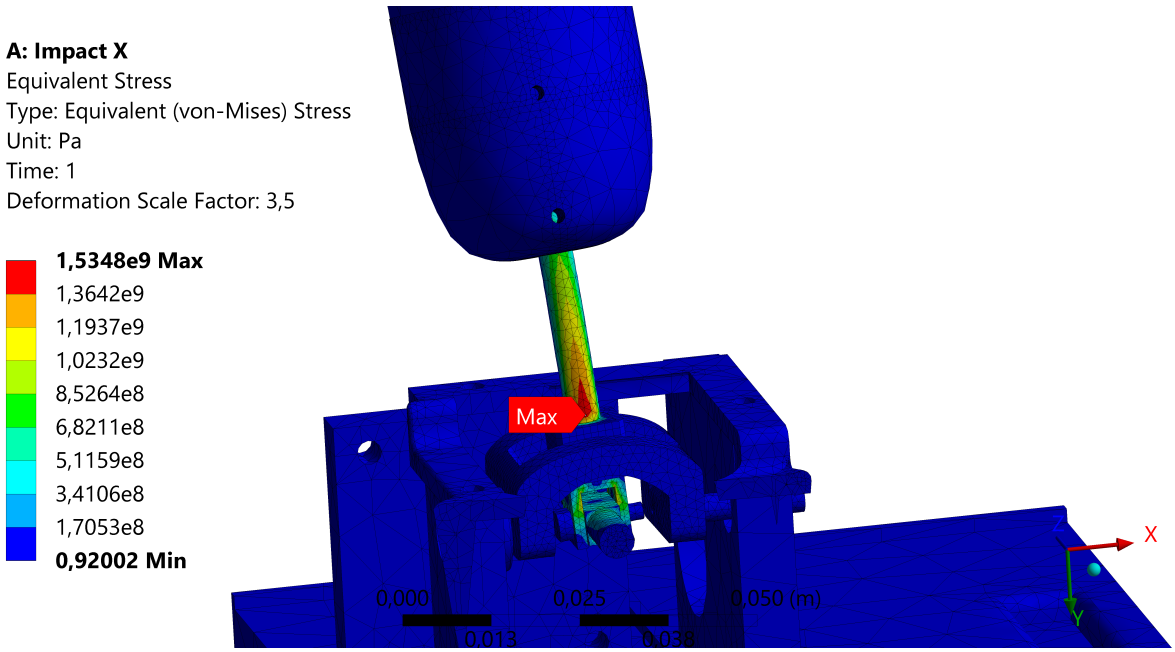

Figure 4.19: *Equivalent von Mises stresses impact loading case X-axis*

In figure 4.20 the total deformation is presented for the impact case in y-direction. The max deformation is 8.9 mm at the top of the joystick. The deformations are displayed with a scale factor of 5.

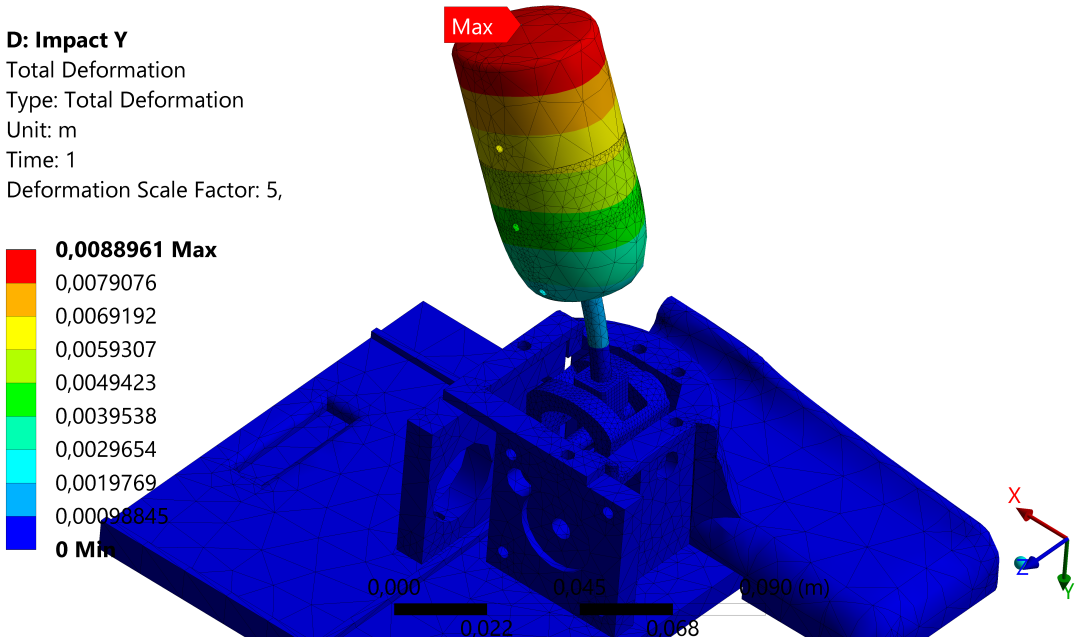

Figure 4.20: *Total deformation impact loading case Y-axis*

In figure 4.19 the von Mises stresses are presented for the impact case in y-direction. The highest stresses are $1.65 * 10^9$ Pa which is above the ulatimate strength of $2.5 * 10^8$ Pa. The max stress is found at the base of the joystick shaft where it meets the sleave bearing.

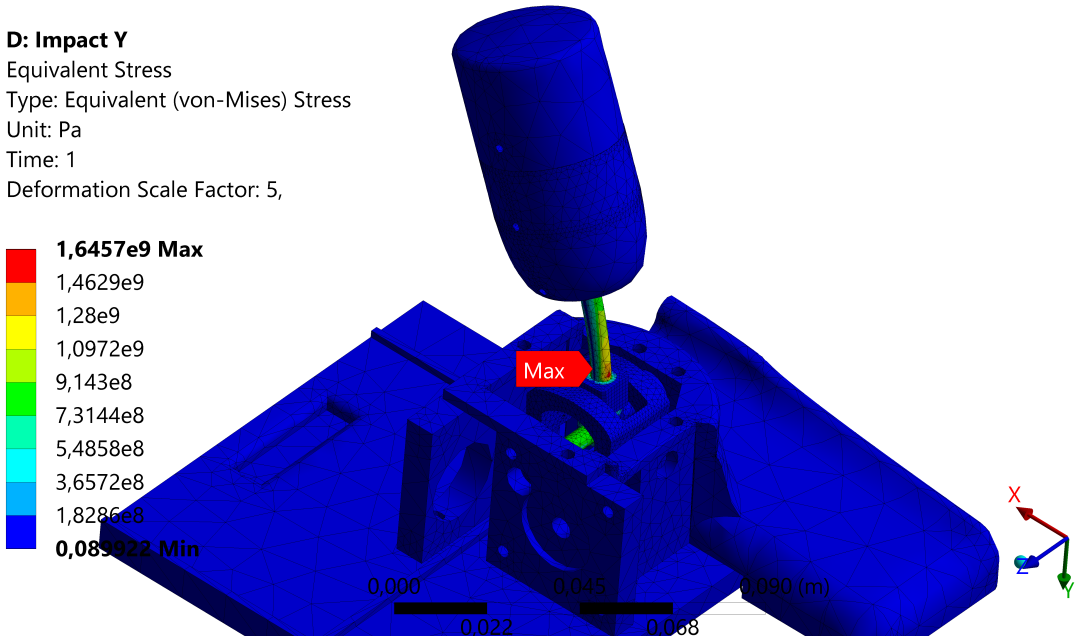

Figure 4.21: *Equivalent von Mises stresses impact loading case Y-axis*

4.9.11.2 Structural analysis torque loading case

In figure 4.22 the total deformation is presented for the torque case in X-direction. The maximum deformation is 0.27 mm and is found at the base of the bridge. The deformation is displayed with a scale factor of 11.3.

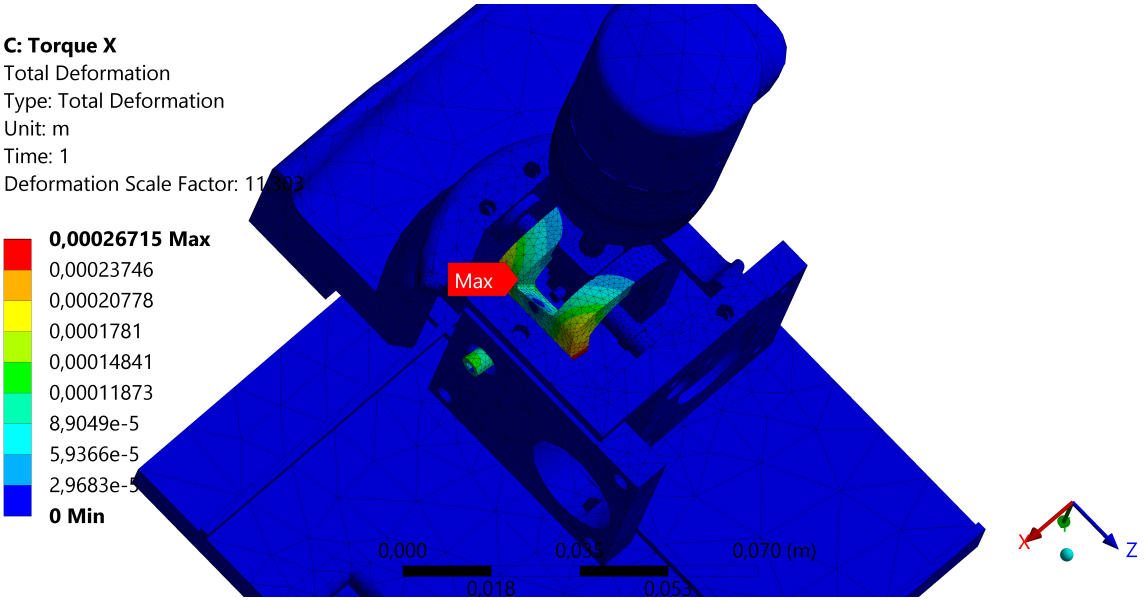

Figure 4.22: *Total deformation torque loading case X-axis*

In figure 4.23 the von Mises stresses are presented for the torque case in X-direction. The highest stress is $3.53 * 10^8$ Pa.

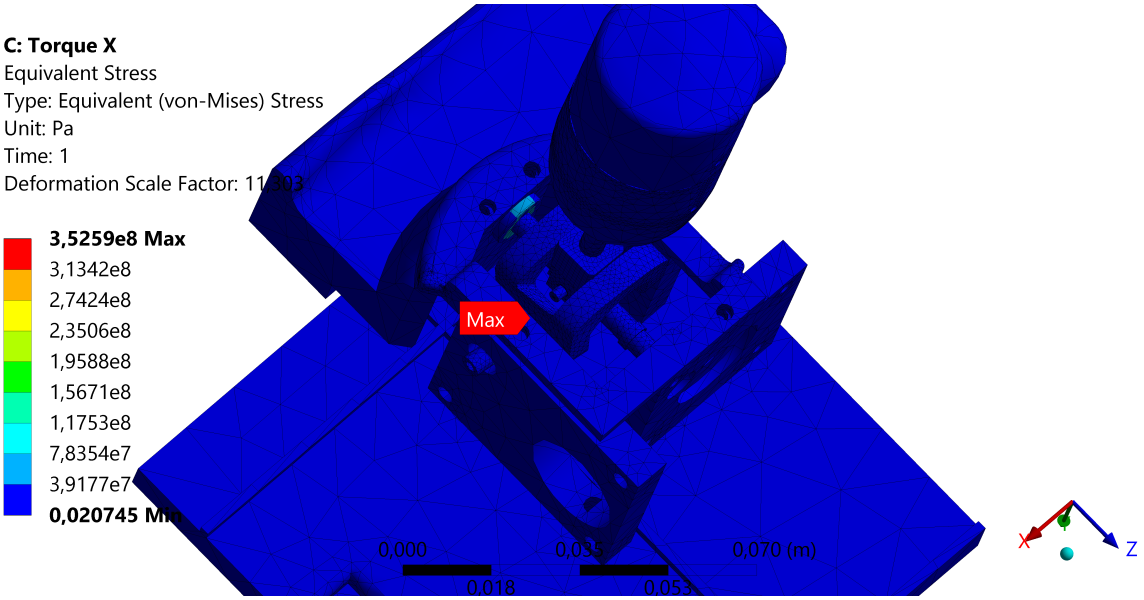

Figure 4.23: *Equivalent von Mises stresses torque loading case X-axis*

In figure 4.24 the total deformation is presented for the torque case in Y-direction. The max deformation is $1.6 * 10^{-2}$ mm. The deformations are displayed with a scale factor of 150.

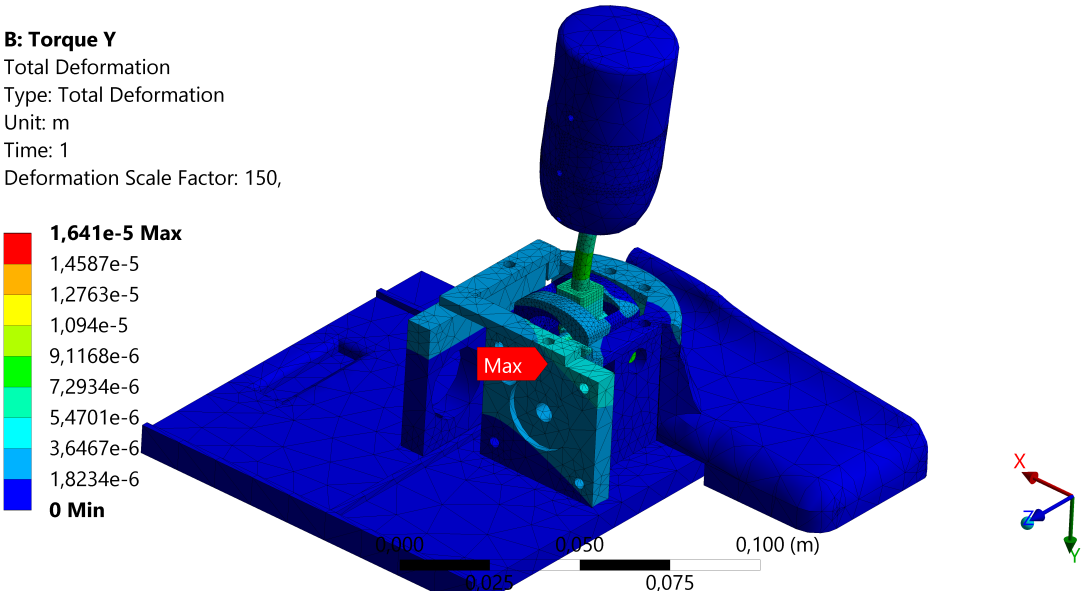

Figure 4.24: *Total deformation torque loading case Y-axis*

In figure 4.25 the von Mises stresses are presented for the torque in Y-direction. The highest stress is $2.66 * 10^8$ Pa.

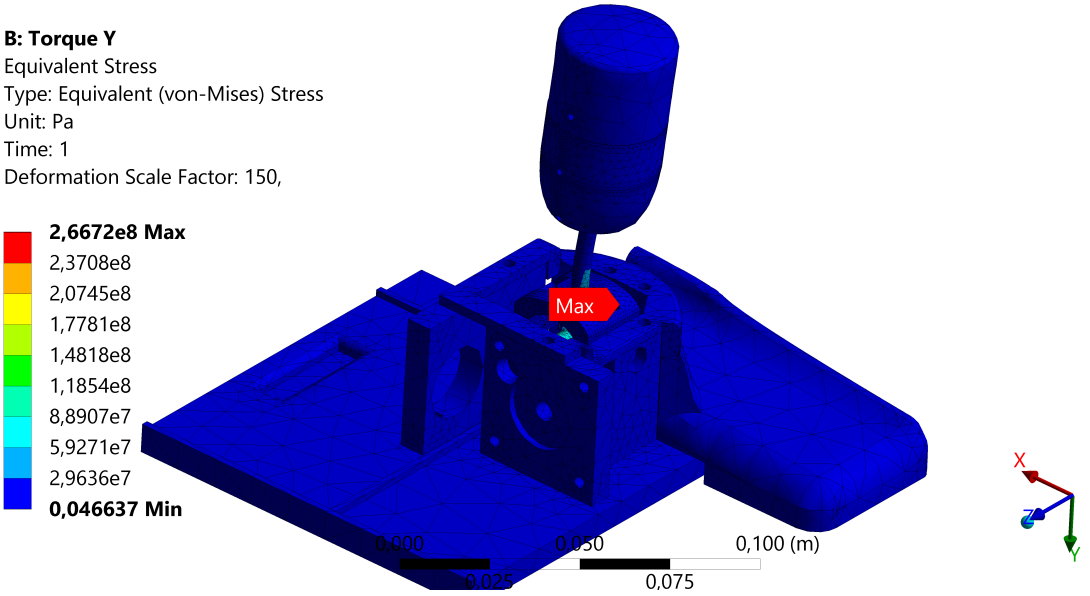

Figure 4.25: *Equivalent von Mises stresses torque loading case Y-axis*

4.10 Building of prototype

All the manufactured and bought parts, exclusive the knob, base plate and encoders are displayed in figure 4.26.

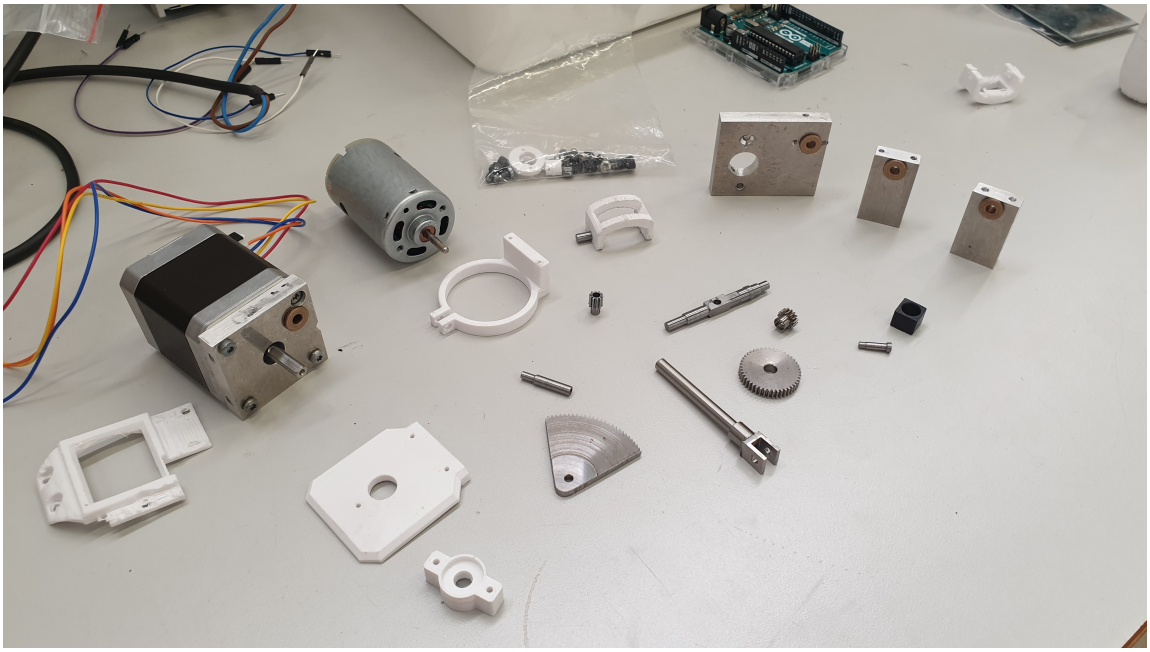

Figure 4.26: *Components for the prototype*

The finished prototype is presented in figure 4.27.

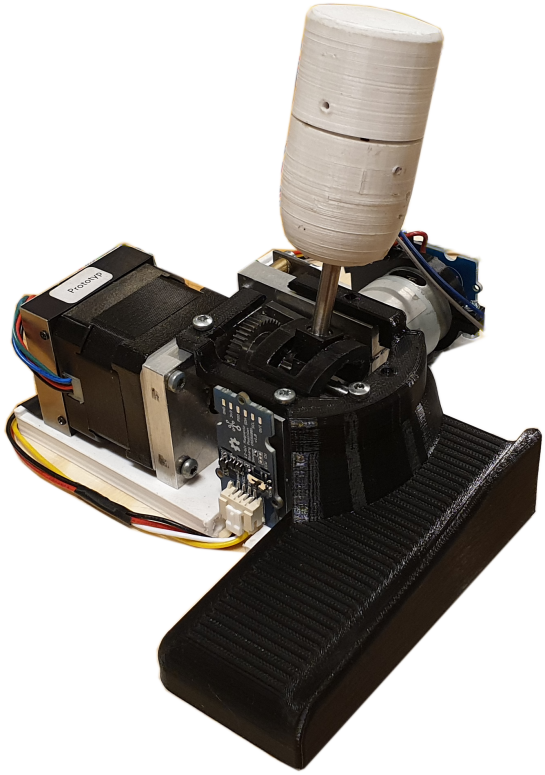

Figure 4.27: *The finished prototype*

In the building of the prototype some differences from the mechanical design were necessary. The BDC motor which were bought did not behave as expected and the decision to use a smaller BDC motor with a larger

gear reduction was taken. The gear reduction turned out to have relatively large amount of friction in it and had an impact on the overall feeling. In figure 4.28 the additional gear step and the smaller BDC motor is displayed. The gear reduction was chosen to still meet the requirements set by the requirement specification, the full specification is tabulated in table 4.24.

Table 4.24: Specifications of the new gear reduction and BDC motor

Gear reduction	1:59.88
Motor torque	0.043 Nm
Max theoretical torque	2.57 Nm

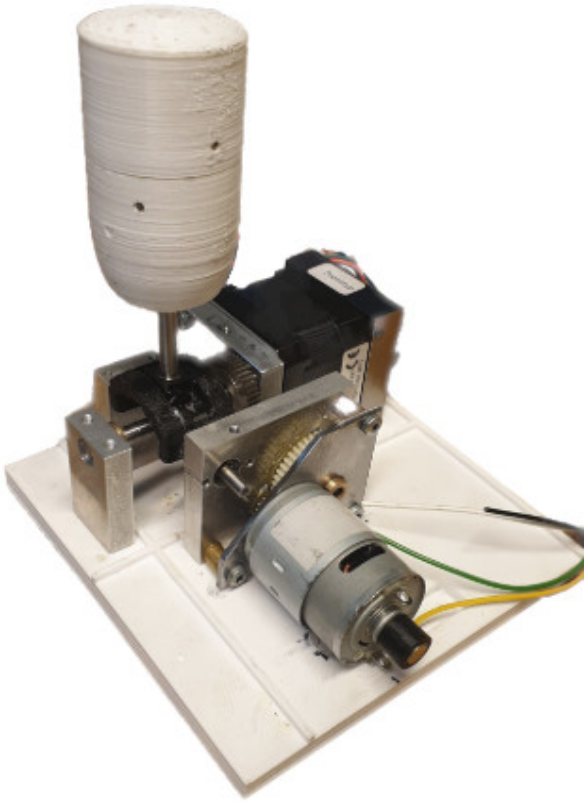

Figure 4.28: *The new two stage gear reduction for the BDC motor*

The stepper motor driver which was intended to be used failed to communicate with the Arduino and thus a new solution was sought. A stepper motor from Trinamic with an built in driver was instead used of Nema 17 size. Specifications are tabulated in table 4.25. The gear reduction of 1:3 was not changed.

Table 4.25: Trinamic Nema 17 PD 43-1-1270 specifications

Holding torque	0.27 Nm
Step size	1.8 °
Microsteps	1...256

4.11 User test of prototype

To test the prototype eight different test cases was formalized and a questionnaire developed, see table 3.4 and 3.5 respectively. In table 4.26 the average score from the user test on the prototype is presented. The combined

mean score is 4.65 out of 5. The highest rated question was *"Does the feeling in the joystick invite you for high speed driving?"* with a mean score of 5 and the lowest *"How much do you like the solution switching from driving to docking mode? Do you think it will work?"* which got the mean score 4.25.

Table 4.26: Prototype user test questionnaire results with the mean score

Question:	**Grading:**	**Mean score:**
How clear is it what amount of actuation is applied?	1-5	4.78
Does the haptic feedback help?	(Yes/No)	Majority yes
Is it clear when the actuator is in position or not?	1-5	4.71
Does the feeling in the joystick invite you for high speed driving?	1-5	5
How clear is it what you should do to avoid collision?	1-5	4.75
How much do you like the solution from switching from docking mode to driving mode? Do you think it will work?	1-5	4.33
How much do you like the solution switching from driving to docking mode? Do you think it will work?	1-5	4.25
How intuitive is the gear changing?	1-5	4.67
How much do you like the gear changing solution?	1-5	4.63
How intuitive is the RPM changing?	1-5	4.78
How do you like the range of motion of the joystick?	Open question	
How do you like the size of unit and stick?	Open question	
Would you like to use this product for many hours a day?	Open question	

The impressions from the test panel was mainly positive. A suggestion mentioned by several test persons was that an increase in the range of motion when adding "digital functions" to the joystick might be desired.

4.12 Prototype fulfilment of requirement specification

The prototype fulfilled all the demands set in the requirement specification except the torque on the Y-axis produced by the stepper motor. The measured resistance in the Y-axis was 5.2 N and the requirement was set to 13 N. The range of travel and the torque to produce resistance in the X-axis was sufficient. Packaging requirements were all below the set requirement and the prototype without a case measured 110x130x50 mm [X,Y,Z].

5 Discussion

In this section the results and method will be discussed.

5.1 Test rigs

The test rigs was a breeding ground to test different concepts and actuators. The information gathered during the testing provided both new ideas and information for the concept generation and selection for the prototype. Ideally a test rig for each created concept would have been created and tested side by side to compare. Instead the test rigs were made modular and actuators were replaced.

If more time and resources would have been available more solutions for actuators could have been tested and might have proven to achieve good results. More types of electrical motors such as brushless solutions could have been tested.

5.2 User needs

The user needs were based on the interviews and tests conducted with the test rigs. The test panel consisted of employees of CPAC Systems. The tests were not conducted in a boat due to the simple test rig being used. Thus impressions and ideas might be weighted by this. A test group consisting of users working with similar systems in marine conditions everyday, or users without any earlier joystick experience, might produce a different result. The marine industry has a long history and is full of tradition and because of this it might be harder to introduce new concepts to replace already well established concepts, hence old captains might think this product is unnecessary and not intuitive.

5.3 Electric solution vs semi electric solution

Choosing a fully electric solution opens up for a long life span of the product and future proofs it. To release a new function or update one can simply update the software to improve upon the product without any change to the mechanics. To be able to take advantage of this possibility it means that the mechanical solution needs to be carefully specified since it cannot be as easily changed. Things like the motion arc, range of travel and the torque that can be delivered, needs to be carefully chosen

5.4 Prototype

In the following section the built prototype will be discussed.

5.4.1 Joystick joint

There is some play in the joint between the joystick shaft and the X-axis. This is due to the contact area between the fork on the joystick shaft and the X-axis being small, and the tolerance between the two parts is not perfect. There will also be wear on the pin, keeping the two in place, over time which will result in more play. To solve this, the contact area between the fork and the axis can be made larger and the pin be exchanged for a screw, to keep the fork gap tighter and constant.

The joystick joint successfully transferred torque from the actuators. If wanted, the actuators could be replaced by other torque providing actuator. Hence, the joint can be applicable also for mechanical solutions or other electric ones.

5.4.2 Positional sensors

The mechanical design has the possibility to put a sensor on both the motor shaft, and the shaft connected directly to the joystick (X and Y-axis). In the prototype only the sensor connected to the joystick was used due to the simplicity of programming and to measure as close to the actual joystick position as possible. When measuring the motors position any play in the mechanism such as the gear reduction and bearings will affect the measurement of the joysticks position. Utilizing both the sensors in sensor fusion could result in both better feedback and motor control. If one of the sensors fail, it will still be possible to drive the boat but with a decrease in control of the feedback

5.4.3 Stepper motor control

When controlling the torque output actively while backdriving the motor proved to be difficult and was not solved for the prototype. This most likely had some affect on the user test performed even though the tests were designed with this in mind. The comparison in feeling between the stepper motor and BDC-motor would be useful information in which actuator to choose to provide a good user experience. Most likely a smart idea in an industrialized solution is to choose two identical motors (if torque requirements are the same) to be able to use the same hardware and software on both axles.

5.4.4 Choosing BDC-motor

The prototype was first intended to use a quite large BDC-motor which proved to be impossible. To produce any amount of torque it required large amounts of current (3-4 A to provide any torque) and even then the torque output at low speeds was poor. The decision was then taken to increase the gear reduction and use a smaller motor which provided sufficient results. The reasons behind the mishap is still unknown to the authors; if it was a misinterpretation of the data sheet or some factor in the motor design which made it unsuitable for the application is unknown.

5.4.5 Placement of motors

As the motors are oriented in the prototype it naturally makes the prototype more inclined to be used with the right hand. If the prototype is allowed to grow in height (Z-direction) one of the motors might be placed underneath the joystick joint making it more fitting for ambidextrous use and a more compact packing in either X or Y-direction.

5.4.6 BDC motor vs stepper motor

The stepper motor used in the prototype proved to be difficult to control as wanted. Backdriving it to produce a spring like sensation was not successful. In theory it should be possible with the stepper motor and the result should be better than compared to the BDC motor. The BDC motor was easily controlled and provided a satisfactory feeling in the feedback. One drawback with the BDC motors is that they can not produce and holding torque, which the stepper motor can. The comparison between the feeling of the two motors would have been interesting information for choosing motor type. Now it is difficult to draw any clear conclusions.

5.4.7 Noise of motors and drivers

During the user tests several test subjects mentioned that the electric noise of the driver and PWM-noise from the BDC motor was disturbing. The noise will probably reduce with a better motor control. During the testing of the force feedback gaming joystick, a considerable difference to the better was noted, even tho the gaming joystick also was equipped with BDC-motors. Noise might still be a problem in a product, even with better motor control, and affect the user feeling. It is difficult to say what kind of case is needed to cancel the noise, but a sturdy enough case will probably cancel the problem.

5.4.8 Impact of friction on feeling

When developing the prototype and the test rigs it was noticed that having a "good" amount of friction in the movement of the joystick was very important for creating a good user experience. If there would be no

friction at all, and all the resistance would come from the motor, the small backlash and play in the gear train would be highly noticeable. While in the other end, if there should be to much friction, the feeling in the stick would be less responsive, gluey, and the motor control would be harder. Minimizing friction is therefor of high priority in the motor and the parts close to the motor, while the parts closer to the stick could be allowed a little more. When designing a prototype with haptic feedback there are more sources of friction then a joystick without haptic feedback, thus it is even more important to minimize friction. To create a good user experience almost all of the resistance should come from the actuators (which can be controlled) and not from friction in the joystick joint or bearings etc. A small damper could be added close to the stick to remove the feeling of gearing from the motors and dampen the backlash.

The impact of friction also affects the choice of motors and gear reduction. A larger gear reduction will have more friction and the torque to drive the motors without any actuation applied will also increase. To achieve a good user experience one might take that approach as this paper has, to maximize the motor size and use as low gear reduction as possible. This has an impact of prize as shown in chapter 4.9.9 as prize tends to increase with a motor with more torque whilst a larger gear reduction is cheap comparatively and does not scale as much. This means a trade off has to be made between prize and the user experience.

5.4.9 Structural analysis of the prototype

The structural analysis was used as a tool to see the loading path and validate the mechanical design. The requirement of 35 0N against the endstops were fully satisfied, which is acceptable for an early prototype. The CAD-model have some sharp corners which causes singularities in the simulation and produces high local stresses which will account for some of the high stresses in the simulation. The solution to put an end stop which acts directly on the joystick shaft was developed but was not manufacturing and carried through to the final design. This would have shortened the lever and the torque at the base of the shaft reduced. With further development and adjustment of manufacturing methods and more careful choosing of material alloys, the requirement should be possible to be met. The analysis should be further developed and look into the modelling of the contact. To further validate the results a mesh convergence study should be performed. To corroborate the results even further physical testing should be correlated to the simulations.

5.4.10 Testing of prototype

The majority of the demands in the requirement specification was met. The feedback strength in the Y-axis was less than required due to the need to change the stepper motor to a slightly smaller unit. The intended stepper motor and driver did not work thus a slightly smaller unit with a built in driver was used (still Nema 17 size) which had a lower torque rating. The testing of the feedback strength will have some error margin due to the tolerance of the dynamometers used and the test setup.

The user test was conducted simulating different conditions and the respective function on land. A test in a boat would provide more accurate results in the perception of the functions and overall impression. The test subjects instead had to imagine being in a marine condition. All of the test subjects were employees of CPAC Systems which might provide a bias on the result and for a more thorough investigation the test group should be larger. The result from the user test was that the majority of the test group were highly in favour of the new functions and the haptic feedback, which would be expected from theory.

5.5 Implementation in other fields

The hardware of the joystick can fit in any machine where a three-way joystick of the same size is required. Such fields could be agricultural vehicles, where add on equipment is often controlled via a joystick, and where force feedback could be beneficial for providing position data, and optimization data. It could also be used in construction equipment, like drill rigs and demolition machinery, where the dusty environment often require extra feedback except for the optical. For implementation in other fields, a software update is probably necessary. The base design of the joystick joint is highly scalable, which opens up, also for other fields where smaller or larger joysticks is required.

6 Conclusions

This work ended up consisting of three parts; mechanical design of a joystick joint being able to transfer torque, evaluation of different actuators for haptic feedback joysticks, and development of new functions for boating joysticks.

The three parts together resulted in a force feedback joystick prototype with a couple of new functions aimed at boating. One can conclude after testing of the prototype that the mechanical design is good, the actuators are suitable, and together with the new functions, it will open up for a new kind of boating where the joystick can be the main, or even only device for controlling the boat. The prototype will also be able to do this without decreasing the important driving feeling. Whilst adding a new dimension to boating with the joystick inviting to maneuver at higher speeds as well as docking. It will even increase the feeling and feedback during for example throttle change and driving with surround sensors, since traditional system lacks the ability of giving feedback on these occasions.

The packaging of the joystick did not significantly increase with the addition of haptic feedback. To add haptic feedback to a joystick new costs are introduced which can be balanced depending on the chosen requirement for torque and packaging. The user tests conducted on the prototype showed good results and the added cost could be motivated to achieve a better user experience.

One can also conclude that the winning concept with electric actuators on both X and Y-axis can be a long living product because of its flexibility and ability to adapt for future updates and functions. It can also be a product suitable in many other applications with drive by wire systems.

References

[1] *ABYC P-28 ELECTRIC/ELECTRONIC CONTROL SYSTEMS FOR PROPULSION AND STEERING*. The American Boat and Yacht Council, 2020.

[2] E. Adell, A. Várhelyi, and M. Hjälmdahl. Auditory and haptic systems for in-car speed management – A comparative real life study. *Transportation Research Part F: Traffic Psychology and Behaviour* **11**.6 (2008), 445–458. ISSN: 1369-8478. DOI: https://doi.org/10.1016/j.trf.2008.04.003. URL: https://www.sciencedirect.com/science/article/pii/S1369847808000466.

[3] W. Albert and T. Tullis. *Measuring the user experience: collecting, analyzing, and presenting usability metrics*. Newnes, 2013.

[4] V. Athani. *Stepper motors: fundamentals, applications and design*. New Age International, 1997.

[5] C. Berlin and C. Adams. *Production Ergonomics: Designing Work Systems to Support Optimal Human Performance*. June 2017. ISBN: 978-1-911529-14-9. DOI: 10.5334/bbe.

[6] BOZZIO. *HMI's joysteer 3.0*. 2020. URL: https://www.bozzio.ch/joysteer-3-0/input-devices-joysteer-3-0/?lang=en. Accessed: 2021-01-27.

[7] *British Standard Specification*. 1982.

[8] V. Chouvardas, A. Miliou, and M. Hatalis. Tactile displays: Overview and recent advances. *Displays* **29**.3 (2008), 185–194. ISSN: 0141-9382. DOI: https://doi.org/10.1016/j.displa.2007.07.003. URL: https://www.sciencedirect.com/science/article/pii/S0141938207000613.

[9] R. Condit. Brushed DC Motor Fundamentals. *Microchip Application Note AN905, Microchip Technology Inc* (2004).

[10] R. Condit and D. W. Jones. Stepping motors fundamentals. *Microchip Inc. Publication AN907* (2004), 1–22.

[11] H. Culbertson, S. B. Schorr, and A. M. Okamura. Haptics: The Present and Future of Artificial Touch Sensation. *Annual Review of Control, Robotics, and Autonomous Systems* **1**.1 (2018), 385–409. DOI: 10.1146/annurev-control-060117-105043. eprint: https://doi.org/10.1146/annurev-control-060117-105043. URL: https://doi.org/10.1146/annurev-control-060117-105043.

[12] Euphy. *Inside a stepper motor*. 2013. URL: https://www.flickr.com/photos/15591303@N00/8587101488. Accessed: 2021-05-21.

[13] K. Hameyer and R. J. M. Belmans. Permanent magnet excited brushed DC motors. *IEEE Transactions on Industrial Electronics* **43**.2 (1996), 247–255. DOI: 10.1109/41.491348.

[14] L. Hanson et al. Swedish anthropometrics for product and workplace design. English. *Applied Ergonomics* **2008**.Oct 31 (2009). The information about affiliations in this record was updated in December 2015. The record was previously connected to the following departments: Division of Physiotherapy (Closed 2012) (013042000), 797–806. ISSN: 1872-9126. DOI: 10.1016/j.apergo.2008.08.007.

[15] O. Härkegård. "Backstepping and control allocation with applications to flight control". PhD thesis. Linköping University, The Institute of Technology, 2003, p. 231. ISBN: 91-7373-647-3.

[16] B. Joshi, R. Shrestha, and R. Chaudhar. "Modeling, Simulation and Implementation of Brushed DC Motor Speed Control Using Optical Incremental Encoder Feedback". *Proceedings of IOE Graduate Conference*. 2014.

[17] D. Karimi and D. Mann. Torque feedback on the steering wheel of agricultural vehicles. *Computers and Electronics in Agriculture* **65**.1 (2009), 77–84. ISSN: 0168-1699. DOI: https://doi.org/10.1016/j.compag.2008.07.011. URL: http://www.sciencedirect.com/science/article/pii/S0168169908001798.

[18] J. L. Kirtley Jr et al. *Electric motor handbook*. McGraw-Hill Education, 1998.

[19] Logitech. *Logitech Wingman Strike Force 3D*. URL: https://download01.logitech.com/web/ftp/pub/pdf/gaming/wmforce3d.pdf. ACcessed: 2021-05-22.

[20] K. M. Mart Mägi and M. Evertsson. *Maskinelement*. Studentlitteratur AB, 2017. ISBN: 978-91-44-10905-3.

[21] D. Morris et al. "Haptic Feedback Enhances Force Skill Learning". *Second Joint EuroHaptics Conference and Symposium on Haptic Interfaces for Virtual Environment and Teleoperator Systems (WHC'07)*. 2007, pp. 21–26. DOI: 10.1109/WHC.2007.65.

[22] M. Mulder et al. Haptic gas pedal feedback. *Ergonomics* **51**.11 (2008). PMID: 18941976, 1710–1720. DOI: 10.1080/00140130802331583. eprint: https://doi.org/10.1080/00140130802331583. URL: https://doi.org/10.1080/00140130802331583.

[23] D. A. Norman. *Emotional design: Why we love (or hate) everyday things*. Basic Civitas Books, 2004.

[24] J. Östlund and B. Peters. *Manoeuvrability characteristics of cars operated by joysticks : a manoeuvring test*. Tech. rep. 860A. Översättning av: Joystickutrustade bilars manöveregenskaper : ett manöverprov. VTI rapport 860. Swedish National Road and Transport Research Institute, 1999, p. 50.

[25] B. Peters. "Evaluation of Adapted Passenger Cars for Drivers with Physical Disabilities". PhD thesis. Swedish National Road and Transport Research Institute, 2004. ISBN: 91-7373-911-1.

[26] Red-Magnetics. *Solenids specifications*. 2021. URL: `https://www.red-magnetics.com/en/product-groups/linear-solenoids/cylinder-solenoids/its-lz-2560-z/`. Accessed: 2021-05-20.

[27] *Small craft – Electrical/electronic control systems for steering, shift and throttle (ISO 25197:2020)*. Svensk standard, 2020.

[28] K. T. Ulrich. *Product design and development*. Tata McGraw-Hill Education, 2003.

[29] I. Virgala et al. Control of Stepper Motor by Microcontroller. *Journal of Automation and Control* **3**.3 (2015), 131–134.

[30] C. R. Wagner, R. D. Howe, and N. Stylopoulos. "The role of force feedback in surgery: analysis of blunt dissection". *Haptic Interfaces for Virtual Environment and Teleoperator Systems, International Symposium on*. Citeseer. 2002, pp. 73–73.

A Requirement specification

Requirement Verification Specification	Joystick Master thesis		Eric Gustafsson, Jonathan Persson
Requirement:	**Unit:**	**Target value:**	**Prototype values:**
X-axle degrees of movement	degrees	± 30	± 30
Y-axle degrees of movement	degrees	+ 40, - 30	+ 40, - 30
Z-axle degrees of movement	degrees	± 35	± 35
Overall measurements base [X,Y,Z]:	[X,Y,Z] mm	120x150x70	110x130x50 (No case)
Joystick motion arc X	mm	80	80
Joystick motion arc Y	mm	80	80
Joystick handle diameter	mm diameter	34	34
Joystick grip type	-	Finger grip	Finger grip
Joystick length (above base)	mm	80	
Base resistance X	N	2.5	2,4
Base resistance Y	N	2.5	1
Base resistance Z	N	5	
Adjustable resistance X	N	2.5-13	2.4-16
Adjustable resistance Y	N	2.5-13	1.0-5.2
Max feedback strength X (absolute value)	N	13	
Max feedback strength Y (absolute value)	N	13	
Max detent strength X	N	13	16
Max detent strength Y	N	20	12
Max detent strength Z	N	6	
Range from neutral to gear engaged forward (driving	degrees	20	20
Range throttle increase (driving mode)	degrees	20	20
Range throttle decrease (driving mode)	degrees	20	20
Range reverse (driving mode)	degrees	-30	-30
Able to withstand 350N ± 5N against X,Y endstops	-	-	
Able to withstand 7.5Nm of torque on Z-axis	-	-	

B Pugh-matrix X-axis

X-axis	Reference					
Selection criteria:	**Concept 1**	**Concept 2**	**Concept 3**	**Concept 4**	**Concept 5**	**Concept 6**
Cost	0	-	-	-	-	-
Robustness	0	0	0	-	-	0
Packaging	0	-	-	-	-	-
Adaptability	0	0	0	-	-	0
Smooth	0	0	+	-	-	0
Robust feeling	0	+	-	-	-	0
Failsafe	0	0	-	-	-	0
Sum +	0	1	1	0	0	0
Sum 0	7	4	2	0	0	5
Sum -	0	2	4	7	7	2
Net score	0	-1	-3	-7	-7	-2
Rank	1	2	3	4	4	2

C Pugh-matrix Y-axis

Y-axis	Reference											
Selection criteria:	**Concept 1**	**Concept 2**	**Concept 3**	**Concept 4**	**Concept 5**	**Concept 6**	**Concept 7**	**Concept 8**	**Concept 9**	**Concept 10**	**Concept 11**	**Concept 12**
Cost	0	-	-	-	-	-	-	-	-	-	-	-
Robustness	0	0	-	-	0	0	-	-	-	-	-	-
Packaging	0	-	-	-	-	0	-	-	-	-	-	-
Adaptability	0	0	-	-	0	0	0	-	-	0	-	-
Smooth	0	0	0	-	0	0	+	-	-	0	0	-
Robust feeling	0	0	0	-	0	0	+	0	-	0	0	0
Smooth throttle feeling	0	+	+	-	0	+	0	+	+	-	0	+
Failsafe	0	0	-	-	0	0	-	-	-	-	-	-
Sum +	0	1	1	0	0	1	2	1	1	0	0	1
Sum 0	8	5	2	0	6	6	2	1	0	2	3	1
Sum -	0	2	4	8	2	1	4	6	7	6	5	6
Net score	0	-1	-2	-8	-2	0	-2	-5	-6	-6	-5	-5
Rank	1	2	3	6	3	1	3	4	5	5	4	4

D Cost and time breakdown of the prototype

Table D.1: Listing of parts, manufacturing methods, price and estimated manufacturing time for the whole prototype

Part:	**No:**		**Material:**	**Price [SEK]:**	**Est. man. time [h]:**
10-gear	1	bought	steel	248	-
15-gear	1	bought	steel	92	-
45-gear	1	bought	steel	296	1
114-gear	1	bought	steel	132	1
base-plate	1	printed	PETG	-	-
bearing-block	2	manufactured	aluminium	-	2
dc-motor	1	bought	-	43	-
joystick-joint-screw	1	manufactured	steel	-	1
joystick-shaft	1	manufactured	steel	-	3
joystick-shaft-sleave	1	manufactured	teflon	-	1
knob-top	1	printed	PETG	-	-
knob-base	1	printed	PETG	-	-
bushings	4	bought	sintered bronze	100	-
potentiometer	1	bought	-	7	-
stepper-motor-mount	1	manufactured	aluminium	-	2
stepper-motor	1	bought	-	450	-
x-axis-bridge	1	printed	-	-	
x-axis-motor-mount	1	manufactured	aluminium	-	2
x-axis-stub-shaft	1	manufactured	steel	-	1
x-axis-stub-shaft-2	1	manufactured	steel	-	1
y-axis	1	manufactured	steel	-	1
encoder-card	4	bought	-	250	-
encoder-holder-DC	1	printed	PETG	-	-
encoder-holder-step	1	printed	PETG	-	-
Z-spring	1	bought	steel	-	-
cables	1	bought	-	100	-
misc screws	-	bought	steel	30	-
-	**Total:**	-	-	**Total:**	**Total:**
-	26	-	-	1758	21