CHALMERS
UNIVERSITY OF TECHNOLOGY

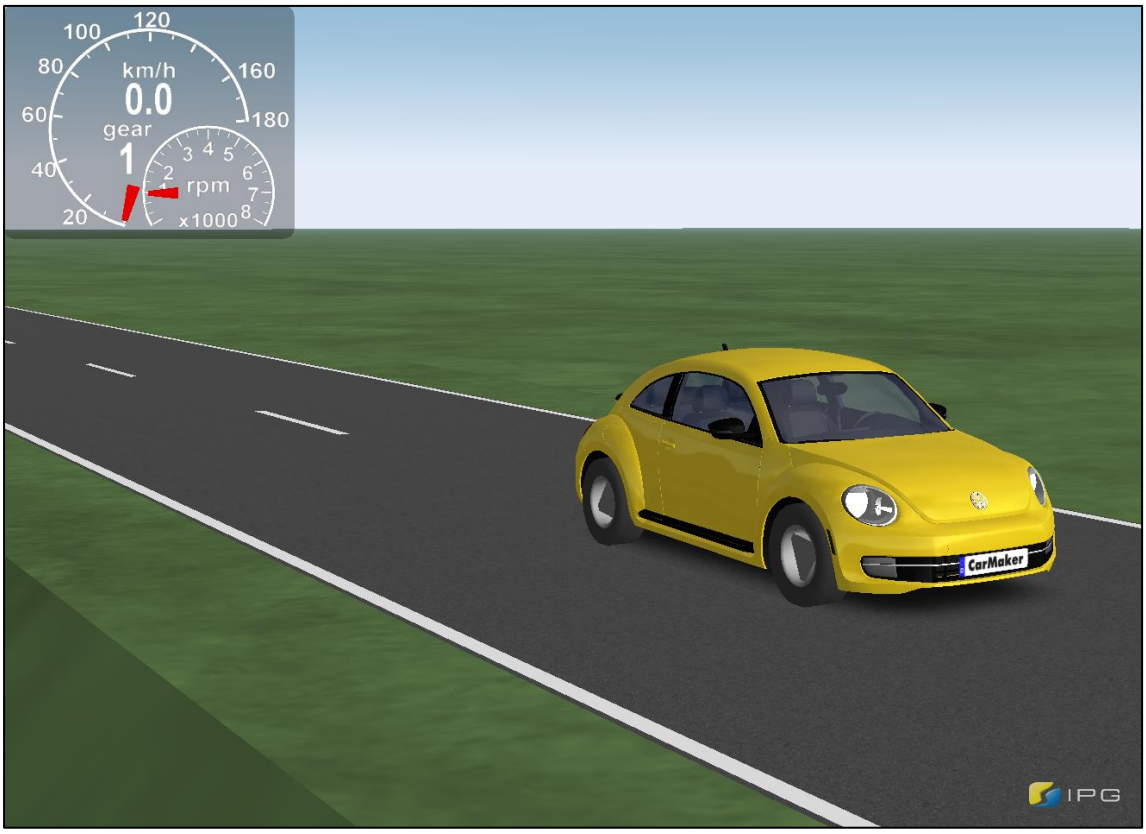

Modelling of propulsion system for complete vehicle verification through simulation

Master's thesis in Automotive Engineering

Abhishek Bhat
Akshay Vishwanath Malghan

Department of Applied Mechanics
CHALMERS UNIVERSITY OF TECHNOLOGY
Gothenburg, Sweden 2016

MASTER'S THESIS IN AUTOMOTIVE ENGINEERING

Modelling of propulsion system for complete vehicle verification through simulation

Abhishek Bhat
Akshay Vishwanath Malghan

Department of Applied Mechanics
Division of Vehicle Engineering and Autonomous Systems
Vehicle Dynamics group
CHALMERS UNIVERSITY OF TECHNOLOGY
Göteborg, Sweden 2016

Modelling of propulsion system for complete vehicle verification through simulation
Abhishek Bhat
Akshay Vishwanath Malghan

© Abhishek Bhat
Akshay Vishwanath Malghan, 2016-09-28

Master's Thesis 2016:72
ISSN 1652-8557
Department of Applied Mechanics
Division of Vehicle Engineering and Autonomous Systems
Chalmers University of Technology
SE-412 96 Göteborg
Sweden
Telephone: + 46 (0)31-772 1000

Examiner: Bengt Jacobson
University Supervisor: Pär Pettersson,
Industrial Supervisor: Michael Palander, Jonatan Rydberg

Cover:
IPG Carmaker default car model performing straight manoeuver in IPG Carmaker

Department of Applied Mechanics
Göteborg, Sweden 2016-09-28
Modelling of propulsion system for complete vehicle verification through simulation

Master's thesis in Automotive Engineering
Abhishek Bhat
Akshay Vishwanath Malghan
Department of Applied Mechanics
Division of Vehicle Engineering and Autonomous Systems
Vehicle Dynamics group
Chalmers University of Technology

Abstract

This master thesis involves modelling and simulation of two physical plant models (simple and advanced) and respective controllers in IPG Carmaker environment. The scope of the thesis is to develop the physical plant models in Modelica (with Dymola tool) and the respective controller models in Matlab / Simulink.Plant and controller are exported as functional mockup units from Dymola and Matlab, respectively, to vehicle model in IPG Carmaker.

This thesis is aimed at understanding how model based development, with verification on a vehicle level, can be implemented for a dual clutch transmission system. Virtual environment will hence, serves as a platform to perform vehicle level verification. A simple engine model, simple and advanced model of transmission, simple and advanced model of respective controllers, hence totally five models have been developed in different formats and tools and then integrated with IPG Carmaker to verify the performance of the vehicle.

Virtual vehicle architecture, VVA, is a set of rules how a vehicle model should be modularized, such as variable/signal interfaces, parameterization, format- and tool-chains. VVA facilitates vehicle level verification on virtual pre-series during vehicle development. Functional mockup units is a format which enables use of different modelling tools.In the thesis, combination of simple plant with simple controller model and advanced plant with advanced controller model has been tested, the simulation with respect to both set of models were able to run in real time.In the future, different combination of models of subsystems can be tested depending on the level of detail required.

Keywords: Physical plant models, IPG Carmaker, Modelica, FMI, Dymola, Matlab, Simulink, powertrain simulation, transmission modelling,Virtual verification.

Acknowledgment

This thesis was carried out with collaboration of China Euro Vehicle Technology AB (CEVT), Alten and division of Vehicle Engineering and Automotive Systems at Chalmers University of Technology. This thesis also saw the integration of two other theses under CEVT and ÅF, which paved the way to have an interesting cooperation.

The entire thesis was carried out under the supervision of Michael Palander from CEVT and Jonatan Rydberg from Alten. The sincere gratitude should be first sent to them for their support and guidance throughout the work. They not only provided the facilities, but also their continous feedbacks throughout our work was quite beneficial

We would also like to express our gratitude to our examiner Bengt Jacobson and supervisor Pär Pettersson from Chalmers University of Technology. Their guidance and suggestions across different fields was advantageous and aided us throughout our thesis work. We would also like to thank Muddassar Piracha from CEVT for his support which served as backbone for our thesis work.

Last but not the least, we express our gratitude to all the teachers from Chalmers, who helped us gain lot of knowledge in the field of Automotive Engineering, whose valuable contribution are never to be forgotten.

Abhishek Bhat and Akshay Vishwanath Malghan, Gothenburg, Sept 2016

.

Contents

Abstract 2
Acknowledgment 3
Contents 4
1 Introduction 7
1.1 Background 7
1.2 Problem formulation 7
1.3 Objective 8
1.3.1 Plant Modelling 8
1.3.2 Controller Modelling 8
1.4 Methodology 9
1.5 Tools used in the thesis 10
2 Literature review 13
3 Modelling of propulsion systems 15
3.1 Physical Plant Model 15
3.1.1 Simple physical plant model 16
3.1.2 Advanced physical plant model 18
3.2 Controller model 24
3.2.1 Simple Controller Model 24
3.2.2 Advanced Controller Model 25
4 Simulation Results and Discussion 31
4.1 Simple Model 31
4.2 Advanced model 34
4.2.1 Gear upshifts 35
4.2.2 Gear downshifts 36
4.2.3 Synchroniser signal 38
4.2.4 Complete maneuver simulation results 39
4.3 Vehicle Simulator 42
5 Conclusion 44
6 Future Work 45
7 References 47
8 Appendix 49

8.1 Dymola environment for simple model.....49
8.2 Simulink environment for advanced model.....50

1 Introduction

1.1 Background

The effort required in vehicle testing and measurement increases along the complexities of the vehicle system and the necessary testing conditions. The increasing competitive automotive market is forcing the manufacturers and the suppliers to restrict the costs in the development, by replacing real world prototypes and tests with simulations and virtual prototypes. With computer simulations becoming the most powerful tool in this world, vehicle dynamic simulations have increasingly become popular and a source to aid improve vehicle design. The integration between the relevant computerized tools and the equations governing the system are essential to meet the requirements of the systematic engineering.

Modelica is a relative new language ,initiated durung 1990s, developed for physical modelling. The main aim was to make it easier to exchange models and model libraries and allow the users to exploit the benefits of the improvements in object oriented modelling methodology. Even though there are large amount of simulation software available, most of them are proprietary and created for certain tools. With only few exceptions, the packages are not capable of modelling components in other domains in an effective way. This can be disadvantageous, as systems are becoming more and more heterogeneous and hybrid accompanying components from many engineering domains and many organisations. [1]

At basic level, mass- and energy-balance equations, phenomenological equations are used and at a higher hierarchical level, system are typically organized as components with well-defined connections (mechanical, electrical, etc.). The object oriented methodology suits this approach. [2]

1.2 Problem formulation

In an era where OEMs are planning towards increased resilience towards standardized processes, time and money are two big challenges that stands before them. The problem lies in the setup phase towards the testing of the vehicle. A vehicle, can be tested in two ways, the first one is the real-world test whereas the second one are virtual simulation test.

The problem is that automotive industries cannot spend much time and money on designing, building, testing, redesigning, rebuilding and retesting which is the usual procedure with the real-world testing whereas with the virtual test the building/rebuilding phase is not present and the models can be used right from the design phase. Simulation testing is way cheaper and faster that performing multiple test of design each time. Also, there is added advantage of model based development that can be achieved with virtual simulations with respect to component, system and vehicle level.

1.3 Objective

CEVT in collaboration with ALTEN was interested to investigate how vehicle performance can be analysed. The thesis focused on:

- Examining the effectiveness of virtual vehicle architecture.
- Development of simple physical plant model(e.g. Lookup table) with corresponding controller unit of 7 gear Dual clutch transmission.
- Development of advanced physical plant model with corresponding controller unit of 7 gear Dual clutch transmission
- Investigate how the above models behave when they are integrated with IPG Carmaker as FMU.
- Validation of these models by performance analysis
- Integration with steering and braking systems which was dependent on the completion of other two master thesis proposals (steering and braking system)[3-4].

1.3.1 Plant Modelling

The physical plant modelling was to be carried out in Dymola. Dymola is modelling and simulation environment based on open Modelica language. It has been developed by Dassault systems. For the above mentioned plant model, the basic library has been used.

1.3.2 Controller Modelling

- The controller model for the simple physical model aims to dynamically give out the actual gear based on the throttle position and vehicle speed. As the clutch modelling is not considered in the simple physical model, the respective controller model neglects the clutch signal. The controller of the simple model is modelled in Dymola.

- The controller model for the advanced plant model aims to provide the actual gear based on the vehicle speed and throttle position, clutch position for the dual clutches, synchroniser signals. The controller of the advanced model is modelled in Matlab/Simulink.

The simulation model obtained shall be used to study different aspects of vehicle which varies from testing for fuel efficiency to active safety systems. Two separate systems are generated to assess the transmission shift quality and validate the effectiveness of the control strategy.

1.4 Methodology

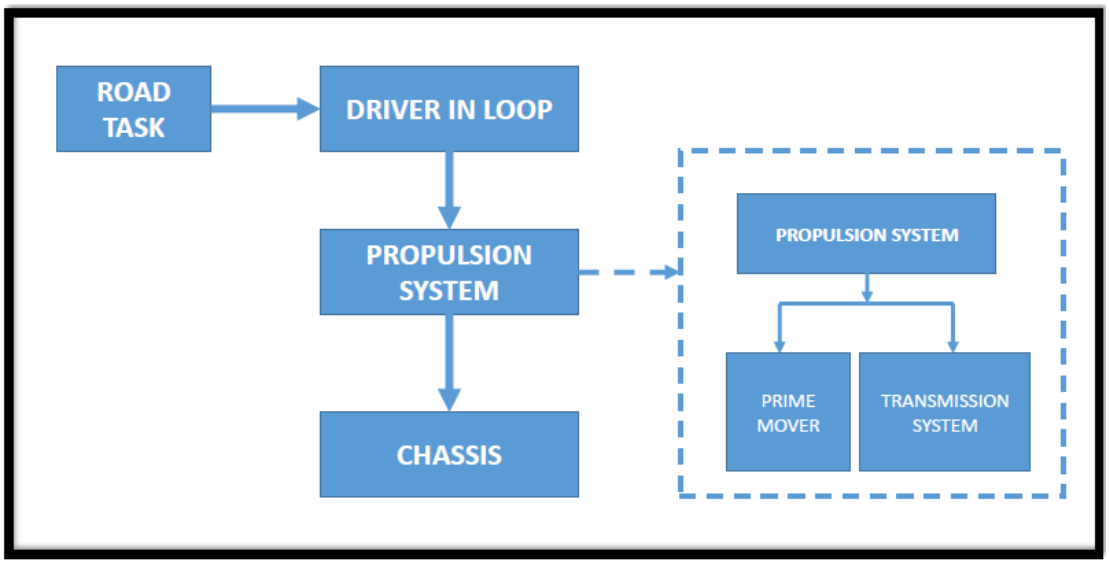

Figure 1: Schematic representation of Virtual Vehicle Architecture

The engine and transmission are main two components which are modelled in the propulsion system. Based on the literature study and the requirements set by CEVT, firstly the simple model of the transmission has been modelled. Next, the respective controller for the transmission model is to be achieved. After the validation of the model, the goal was to attain an advanced transmission model and an advanced controller model.

A simple engine model modelled and used in this thesis, which works on the driver pedal input and engine speed requirement to give out the required torque. After the effective coupling of both transmission and engine, the aim is to integrate a complete vehicle system, which includes other two subsystems i.e. steering and brakes. The IPG Carmaker modularity allowed to replace both Carmaker's engine and Carmaker's transmission models .

Secondly, incorporating IPG Carmaker, simulations were carried out in order to check the robustness of the model and examine the performance of the complete vehicle. The Figure 1 depicts the schematic representation of the vehicle on which depicts the modelling structure of the system. As shown, the main components of the propulsion system are :

a) Prime mover or Engine
b) Transmission

Three physical plant models (two for transmission and one for engine) has been modelled along with the respective controller units. The physical plant model is done using Dymola and the respective controller using Matlab/Simulink. The details of the modelling methodology have been discussed in the chapters below.

1.5 Tools used in the thesis

In this thesis, the softwares are integrated to create a virtual environment for carrying out vehicle simulations. Functional mockup interface (FMI), a standardized interface is used for such simulations. Hence, the Functional mockup units (FMU's) forms the platform for the simulation developments.

Each software used in this thesis, is capable of FMI interactions across other software's. There are four varients of FMI [5]:

1) FMI for model exchange
2) FMI for co-simulations
3) FMI for applications
4) FMI for Product life cycle management

For this thesis, Co simulation variant is used. The Functional Mock up Interface (FMI) is a tool independent standard for the exchange of dynamic models and for co-simulation. The prime motive is to aid the exchange of models between suppliers and OEMs even if a large variety of tools are used and also if some parts of the model has to be kept secret due to company's Intellectual property(IP). The FMI standard provides a platform for model based development of systems and activities from the systems modelling, simulation, validation and testing can be achieved with FMI based approach.

FMI for co-simulation:
Co-simulation is a simulation technique for coupled time continuous and time-discrete systems that uses the modular structure of the coupled systems in every instant of the simulation. The master algorithms control the data exchange between the subsystems and synchronization between all the slave solvers. The examples for co-simulations are multi rate integration and hardware-in-loop simulations. [5]

In the thesis, the physical plant model is generated using Dymola and controller is generated using the Matlab/simulink and both are imported into IPG Carmaker. In this case IPG Carmaker acts as the master solver and the FMUs from Matlab/simulink and Dymola act as the slave solvers.

The master plays an important role in handling the coupled simulation. Apart from the data communication, the master aids the connections and opts for the necessary algorithm between the slave models. The slave FMUs have to be able to perform the subtasks and return the simulation data.

Dymola:

Dymola as described is a simulation software developed by Dassault systems. It uses Modelica language which is an object oriented programming language. Text based and graphical interface based modelling can be carried out in Dymola. Dymola comes with number of default library options like hydraulics, electric power, mechanical systems, vehicle interfaces (dynamics) etc. These standard libraries in Dymola aids in the task of modelling

A representation of the Dymola user interface can be seen in Figure 2. On the left side, we can see the library options.

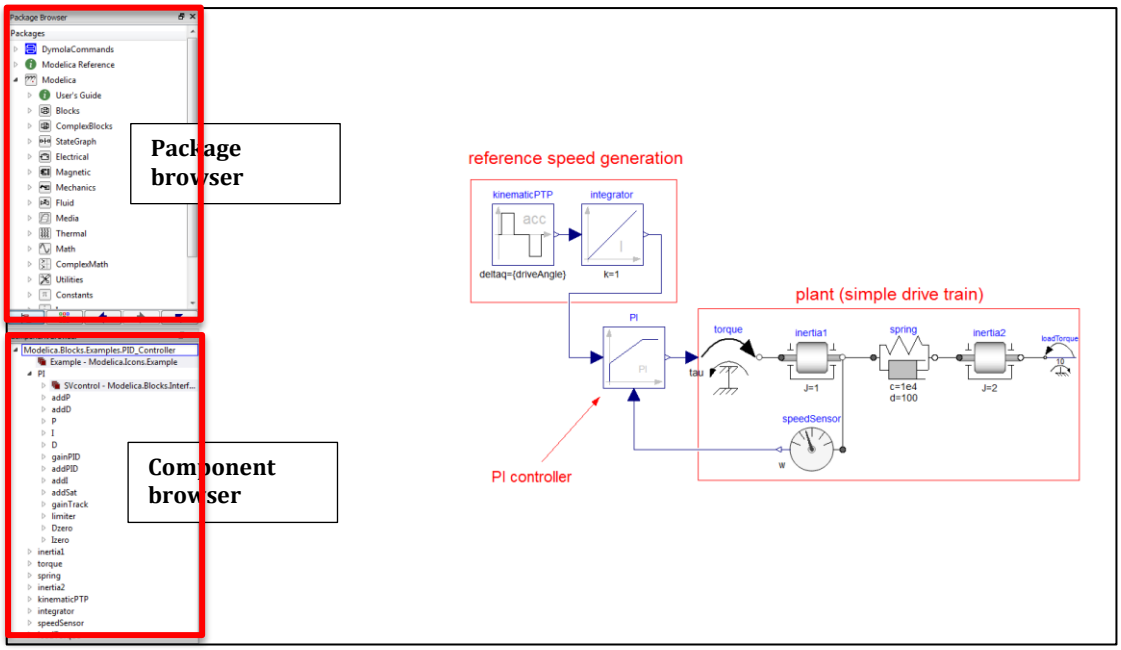

Figure 2: Dymola user interface

MATLAB \Simulink:

Matlab is a multiparadigm numerical computing environment. A proprietary programming language developed by Mathworks. Simulink, developed by Mathworks, is a graphical programming platform for modeling, simulation and analysis of multidomain dynamic systems. The interface is a graphical block diagramming tool and a customizable set of built-in libraries.it also allows integration with the rest of the features of Matlab also [15-16].

IPG Carmaker:

IPG Carmaker provides the virtual vehicle architecture (VVA) for testing the models, which is an platform to import the FMU's generated in Dymola and Simulink, and to verify the performance of the models. The VVE simulates all the necessary components like road, driver, vehicle subsystems and all the parts required to test the dynamics of the model and evaluating the robustness of the controller. This enables the communication between the models albeit the respective model are achieved in separate tools.

Figure 3 depicts the nature of interactions that exists between each software for simulation model development.

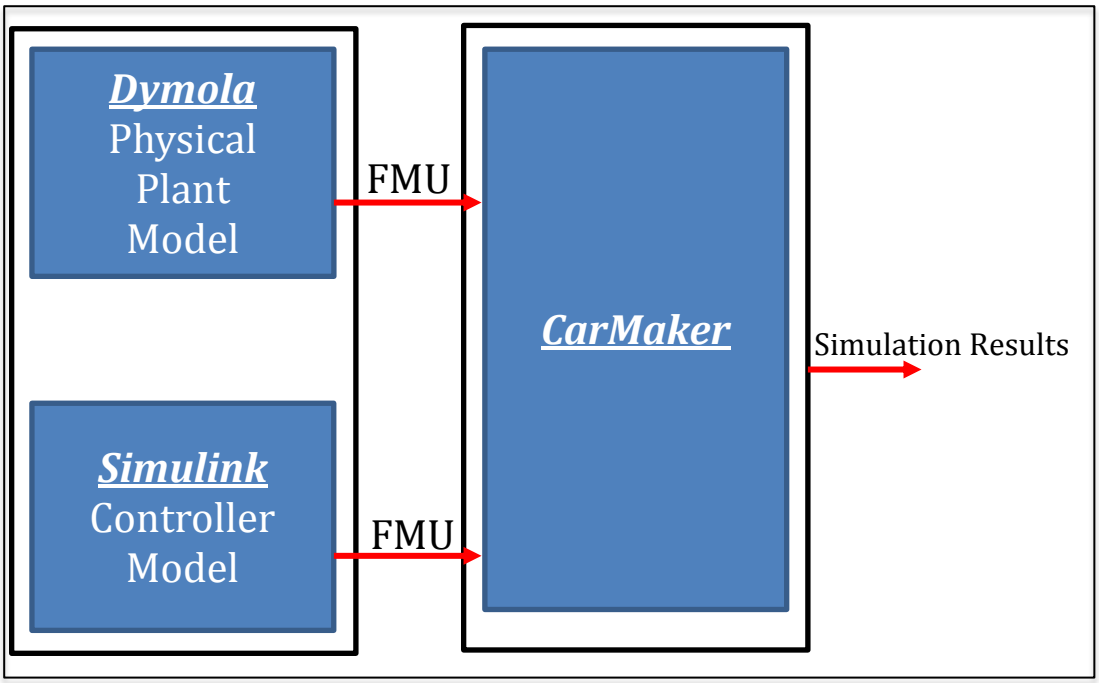

Figure 3: Nature of flow between different platforms

2 Literature review

The concept stated in the thesis is to develop physical plant model and corresponding control models with respect to propulsion system and validate it in IPG Carmaker. With the continuous growth in the creating better driver comfort and stricter emission norms, it is inevitable that automotive companies are heading towards creating a virtual environment for all possible testing before production [6]. This paves the way for better shift control algorithms. The virtual verification requires changed competence amng engineers and moving cost from real test verification to computer verifications.

There are several types of transmissions which offers different performance characteristics across different vehicle segments [7]. Manual transmission systems give an overall efficiency of 96%, highest of all existing transmission systems. Manual transmissions systems have an overall efficiency of 96.2%, which is the highest efficiency for any type of transmission system [8]. There are two feasible design of automated gear shifting transmissions, single clutch and dual clutch transmission system. In the single clutch, a manual transmission system with an integrated control unit operates both the clutch and shift operations. There is an interruption of torque which exists due to gear change in this design due to engine being cut from the loop by the clutch. This interruption leads to jerks due to vehicle acceleration discontinuity and is highly uncharacteristic of the automatic transmission systems.

The other design of automated gear shifting transmissions uses a dual-clutch system between the engine and transmissions and it overcomes the issues with respect to single clutch transmission. A dual clutch transmission, commonly abbreviated to DCT (sometimes also referred to as twin clutch gearbox or double clutch or power shift) is a differing type of automated manual automotive transmission. It utilizes two separate clutches for different gears. Depending on amount of power they need to transfer, the dual clutches can be either single or multiple disk, dry type or wet type [14] being contained as a single unit inside a single housing. The two clutches are engaged alternatively at different speeds and the power transmission can be made to occur smoothly through slippage control [9]. Also, DCT's are capable of power shifts which means that DCTs can shift gear without interupted torque transfer. It is one of the more important features with DCTs.

The shift quality objective evaluation is a critical step in the model-based development. For a multidomain system, it is important the bring complexity into the transmission system which will replicate the transient dynamic behavior like a real object. Walker, Zhang and Tamba [10] have developed both a four degree of freedom (DOF) and 15 DOF dual clutch transmission (DCT) mechanical model so as to compare the shift transient difference. Also, DCT's important feature is 'Power shifts', which means that it can shift gear without torque interruption.

They have presented a detailed synchroniser model in a DCT which included speed synchronization. Lovas et al.[11] has studied the gear shifting strategy in a manual transmission system which defined 8 main phases of synchroniser behavior. H Huang et al. has presented a paper on modelling of an automated manual transmission (AMT)

system which concludes a detailed introduction to AMT methodology and a dynamic model based on Modelica.[12]

Different modelling methods have been developed using Matlab/Simulink.
[12-13]. There are also models developed by using Modelica language, an object-oriented, generally equation based language for modelling a physical system which helps developers to look at modelling from physical perspective rather than a mathematical based modelling [14].

However, such models are very rare and rather simple when it comes to capturing system dynamics in the application of DCT systems and it's still in early stage of development. The pressure profiles on the clutch torque control are based on look up tables and synchroniser have been modelled as a flow switches for simplicity.

Hence, thesis covers aspects of DCT systems with respect to physical modelling through Dymola (Modelica) and the respective control logic will be modelled in Matlab/Simulink. In it, we have presented physical model for simulations and control of shift strategy of DCT vehicles.

3 Modelling of propulsion systems

This chapter explains the physical plant model and the controller model across the propulsion system. All the modelling that has been carried out in this thesis is based on ESOW(engineering statement of work) defined by CEVT.

3.1 Physical Plant Model

Before we discuss in detail about the transmission system modelling, let us see how the engine modelling has been carried out. For a simple engine modelled in this thesis, engine angular speed and the driver pedal position is the physical input signal. The engine model should be a function which specifies maximum torque to be produced at each engine speed hence, the maximum torque becomes a function of the engine speed. The simple physical model of the engine is a look up table which gives out torque produced based on the engine speed. It does not consider the engine dynamics including the engine inertia that takes place while changing operating point.

The dual clutch transmission system is schematically represented in Figure 4. The transmission has seven forward gears and one reverse gear. There are two transmission input shafts, with one solid shaft and another hollow shaft for the respective gears as shown. The solid shaft carries the first, third, fifth and the seventh gears while the hollow shaft carries the second, fourth, sixth and the reverse gears. One of the clutches connects all the odd gears whereas the other connects all the even gears. The synchronisers (S1, S2, S3 and S4) are positioned respectively across two sets of gears.

When a particular gear is actuated, the respective clutch and the synchroniser is activated and the power flows from engine to the wheels through it. The other set of the synchroniser and the clutch remains deactivated, which means that the gears freewheel.

When the gear shifts occur, the off going clutch is slowly deactivated during the same time interval as the oncoming clutch is activated, which makes the torque transmissions uninterrupted and is the important feature of the DCT systems.

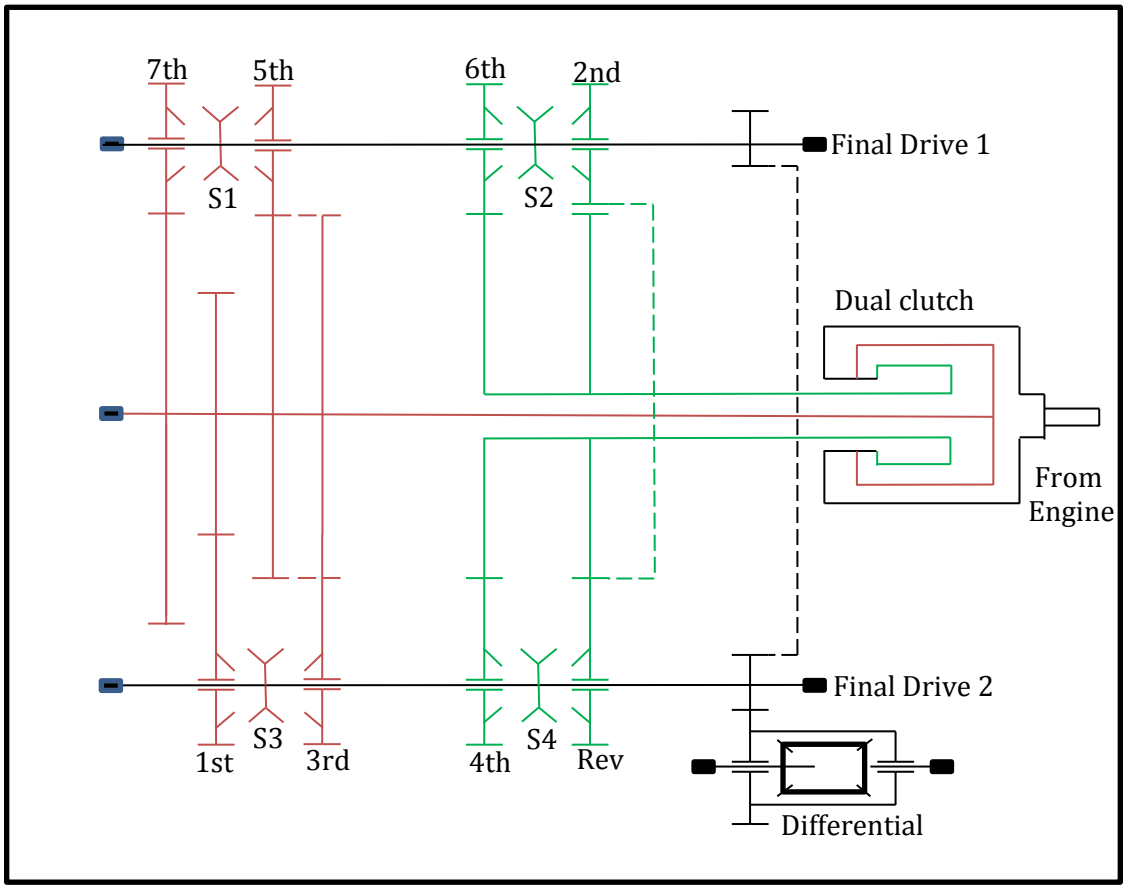

Figure 4: Dual clutch transmission system

Bond graph methodology of modelling has been followed in this thesis. Figure 5 shows the data flow block diagram across the entire propulsion system . It is a graphical representation of physical dynamic system, with each pair of arrows representing bi-directional exchange of energy flows across the system.

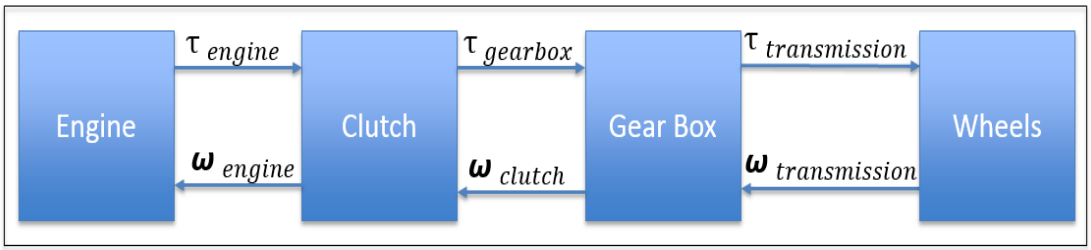

Figure 5: Data flow block diagram of modelling for propulsion system

3.1.1 Simple physical plant model

The simple physical plant model in this thesis are based on the CEVT requirements. The characteristics of this model are:

- Gears: 7 forward + 1 rearward
- 2 concentric input shafts on which even and odd gears are resting
- 2 parallel output shafts
- The clutch has not been considered.

- Inertias are neglected.
- Controller model designed using Modelica.

The primary task of the gearbox subsystem is the transmission of rotation speed and torque from the input to output shaft. The schematic representation of the gearbox is shown in Figure 6. Also, to make the engine useful over a much large range of speeds, transmission systems are important.

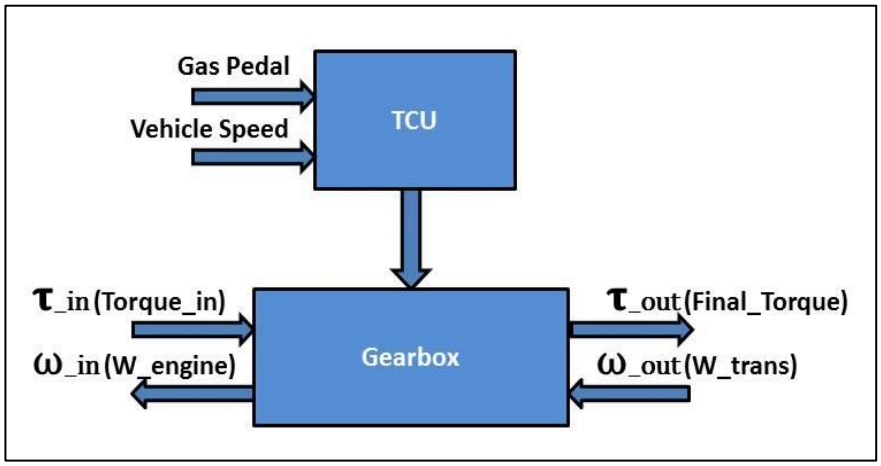

Figure 6: Transmission control unit

In Figure 7, the physical model for the simple model is shown. As shown in Figure 6, the system inputs into the gearbox are Torque from the engine and speed from the output shafts. The Gearbox is the system which contains 7 forward gears and 1 reverse gear modelled as a simple system that converts the input torque into output torque and the speed of the output shaft into speed of the engine.

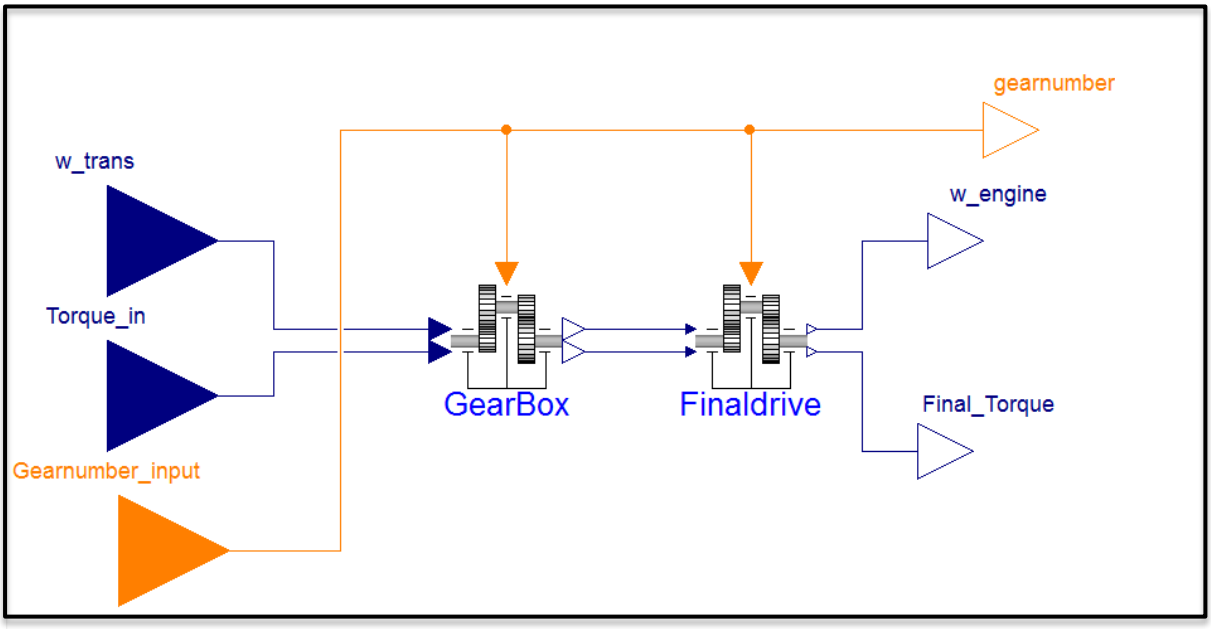

Figure 7: Simple gearbox system

The gearbox provides gear reduction. The power in the system (neglecting losses) is same but the output torque is increased against the reduction in speed across the output shaft.

The governing equation during the shift and during a particular gear operation is given below:

$$\omega_{trans} = \frac{\omega_{engine}}{i} \tag{1}$$

$$T_{trans} = i \cdot \ T_{engine} \tag{2}$$

Where,T_{trans} is the output torque, T_{engine} is the input torque. ω_{trans} is the output angular velocity, ω_{engine} is the engine angular velocity and i is the gear ratio across different gear sets. Depending on the gearnumber and the particular gear ratio, the output characteristics are derived.

3.1.2 Advanced physical plant model

The system layout for the entire propulsion system is as shown in Figure 8. Since, the engine model is simple, it's basically a function that generates torque based on the angular speed fed into the engine model. Hence, this thesis doesn't cover with engine mounts and related dynamics of the system. Gear shafts are modelled as coupled lumped masses. This model follows two sets of equation based on the flow of torque. The first one is the flow when a particular gear is operating and another is when the shift process has been taken place. During the gear shifting process, there is no direct contact between the engine and the wheel since system will be in dynamic transit stage.

In Figure 8, **I_e** is the engine inertia, **Gearbox 1** is all odd gear sets (1st, 3rd, 5th and 7th), **Gearbox 2** is all even gear sets (2nd, 4th, 6th and reverse), I_g is the gear inertia, **I_t** is the transmission inertia, **FD** is the final drive.

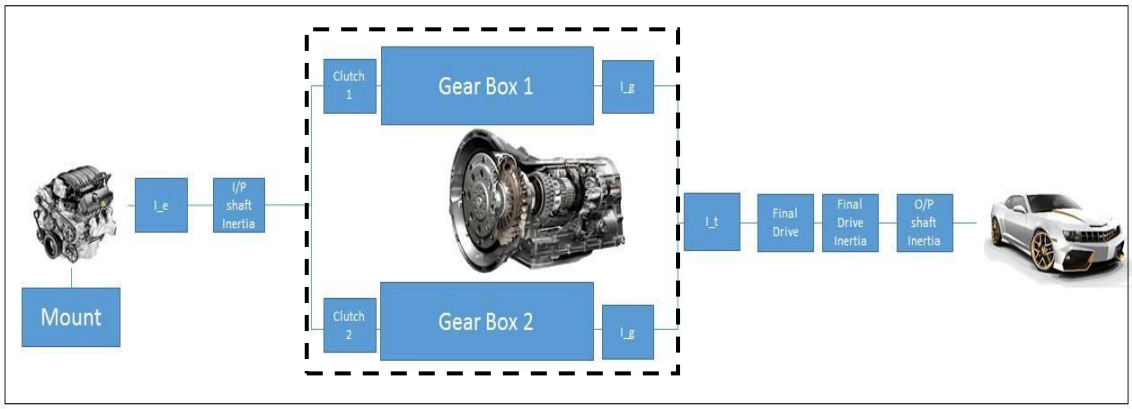

Figure 8: Propulsion system Layout

The dashed line represents the transmission system. The physical plant model of the transmission system(showed in dashed line) in the Dymola environment is shown in Figure 9.

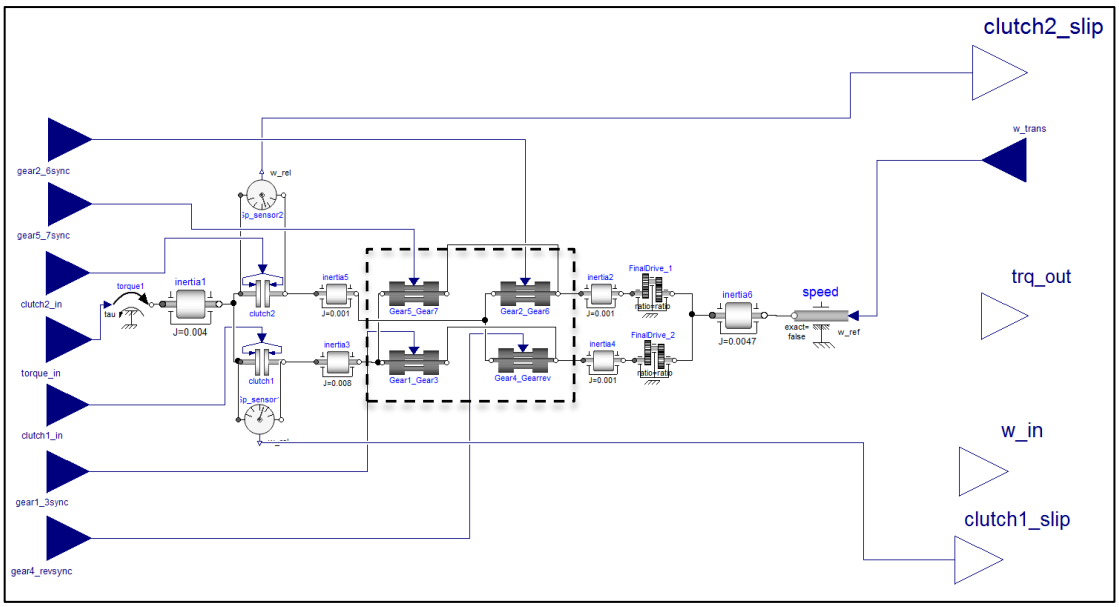

Figure 9: Physical Plant model in Dymola environment

The blue triangles and the white triangles in Figure 9 are the inputs and output in the gearbox respectively. The inputs are the engine torque (**torque_in**), transmission speed (**w_trans**), synchronizer positions (**gear1_3sync, gear2_6sync, gear5_7sync, gear4_revsync**) and clutch positions (**clutch1_in** and **clutch2_in)**. The outputs are transmission torque (**trq_out**), engine speed (**w_in**) and slips across clutch 1(**clutch1_slip**) and clutch 2 (**clutch2_slip)**. The detailed explanation of the individual systems has been explained in this section. The equation for a particular gear change can be written by considering the appropriate gear and considering clutch position across the different gear sets. The 4 components shown in dashed line in Figure 9 indicate the synchronisers, see section 3.1.2.4.

3.1.2.1 Operation in a particular gear

Since the engine characteristics are not considered, this section will only cover the conditions existing in the transmission system.

Transforming Figure 4 into a dynamic equation model, the following figure and equations are obtained.

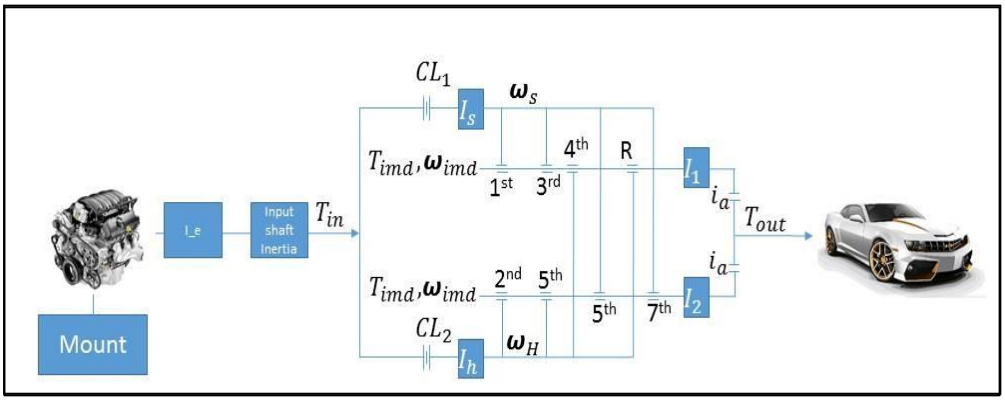

Figure 10: DCT dynamic model

$$I_e \cdot \frac{d\omega_e}{dt} = T_e - (T_{CL1} + T_{CL2}) \tag{3}$$

$$T_{CLi} = T_{imd,\ \ where\ i\ is\ the\ active\ clutch} \tag{4}$$

$$I_{eq} \cdot \frac{d\omega_{imd}}{dt} = T_{imd}(i_t) - \frac{T_{Out}}{i_a} \tag{5}$$

Where, I_e is the engine mass moment of inertia or the input inertia into the transmission system. T_{CL1} and T_{CL2} are the torques carried by the dual clutches. T_{imd} is the intermediate torque which is carried by the shafts attached to individual gear sets. The intermediate shaft torque is either for first, third, fourth and reverse gear sets and other is for second, fifth, sixth and seventh gear sets as shown in Figure 4. The I_{eq} is the equivalent mass moment of inertia across the intermediate shafts. It depends on the particular shaft during operation. For example, I_{eq} for operation in gear 1 and gear 2 is given by:

$$I_{eq} = I_1 + I_h \cdot {i_1}^2 \quad \text{for first gear} \tag{6}$$

$$I_{eq} = I_2 + I_s \cdot {i_2}^2 \quad \text{for second gear} \tag{7}$$

Where, i_x is the gear ratios of the particular gear sets, I_1 is the moment of inertia of the two intermediate shafts. I_h and I_s are the moment of inertia of the hollow shaft and solid shaft.

3.1.2.2 Operation during a shift process

During the shift process, there will be time intervals when none of the clutches stick, but instead slip.For an upshift, say for example, from gear 1 to gear 2, clutch 1 is being released and clutch 2 is applied. During such state transition, the clutch begins to slipping in both clutches.

Hence, the engine torque is not directly transmitted to the intermediate shafts like in the case of particular gear operation. There is no direct linkage existing between the engine and wheel and hence, the governing equation for these states will change. These are represented by:

$$I_e * \frac{d\omega_e}{dt} = T_e - (T_{CL1} + T_{CL2}) \tag{8}$$

$$T_{CL1} = f\left(P_{app1}, \Delta\omega_{CL1}\right) \tag{9}$$

$$T_{CL1} = f\left(P_{app2}, \Delta\omega_{CL2}\right) \tag{10}$$

$$\Delta\omega_{CL1} = \omega_e - \omega_h \tag{11}$$

$$\Delta\omega_{CL2} = \omega_e - \omega_s \tag{12}$$

$$i_{sh} = \frac{\omega_e}{\omega_w \cdot i_a} \tag{13}$$

$$I_{eq} \cdot \frac{d\omega_{imd}}{dt} = (T_{CL1} \cdot i_{odd} + T_{CL2} \cdot i_{even}) - \frac{T_{Out}}{i_a} \tag{14}$$

Where, i_{odd} and i_{even} are gear ratios of current and the next speed involved. i_{sh} is the gear ratio during the shift transition which is a function of time, i_a is the final drive ratio, ω_h and ω_s are the angular velocity of the hollow and solid shaft, respectively. P_{app1} and P_{app2} is the applied pressure on the clutch which are actuated from the transmission control unit. The actuation of the clutch and its transition is described in the section 3.1.2.3.

3.1.2.3 Clutch Model

The default clutch model is copied from Modellica library and adjusted. Clutch is modelled based on the coulomb friction model. The adjustment made are.

- The thermal effects are not considered since they have low dynamics and are not relevant for the purpose of the thesis.
- The friction torques (dynamic and static) are computed using normalized command signal as a fraction of maximum torque capacity.

The model in Dymola defines the clutch torque based on the friction radius, friction coefficient and the number of friction surfaces. When the system is used in control loop, clutch models allow the stick-slip characteristics. The governing equation for the clutch is given by:

If $\omega_{rel} \neq 0$

$$T_{CL} = T_{dyn} \cdot sgn(\omega_{rel}) \quad (15)$$

If $\omega_{rel} = 0$

$$T_{CL} = T_{app} \quad (16)$$

$$T_{dyn} = com\ (T_{maxd}) \quad (17)$$

$$T_{stat} = com\ (T_{maxs}) \quad (18)$$

Where, T_{CL} is the torque transmitted through the clutch. T_{maxs} and T_{maxd} are the maximum dynamic and static frictional torques. T_{app} is the torque capacity thanks to the clutch application pressure between the clutch discs and ω_{rel} is the relative speed between the clutch shaft and the engine shaft. The coulomb friction is usually simplified based on the sign of the relative speeds.

From the characteristics of the clutch model,

$$T_{CL} = cgeo \cdot \mu_e \cdot f_n \quad (19)$$

$$cgeo = N \cdot (r_o + r_i)/2 \quad (20)$$

Where, $cgeo$ is the geometrical coefficients of the clutch, μ_e is the coefficient of the friction, N is the number of friction interfaces. r_o is the outer radius and r_i is the inner radius of the plates , f_n is the normal force acting in the clutch.

The assumptions that have been made in thesis are:

- N=4
- $r_o = 0.1\ m$
- $r_i = 0.07\ m$
- $\mu_e = 0.1\ (wet\ clutch\ type)$

The maximum force is based on the maximum torque that the clutch can take. In this paper, it is assumed that the maximum torque capacity is 2.5 times the maximum engine torque. These assumptions are based on general clutch characteristics available on market.

Both the clutches are actuated based on the normalized force given by the controller. Hence, the relative velocities across the clutches has been considered as the feedback for the controller.

3.1.2.4 Synchroniser model

The dog clutches are equipped with the synchronizer mechanism, which enables smooth engagement of gears. It manages the synchronization process even though the gears are spinning at different speed. Synchroniser has been modeled as clutch element due to the lack of teeth profile. Two clutch models have been connected to one hub. This system thus follows the same methodology as that of the clutch modelling, except the fact that the capacity is higher.

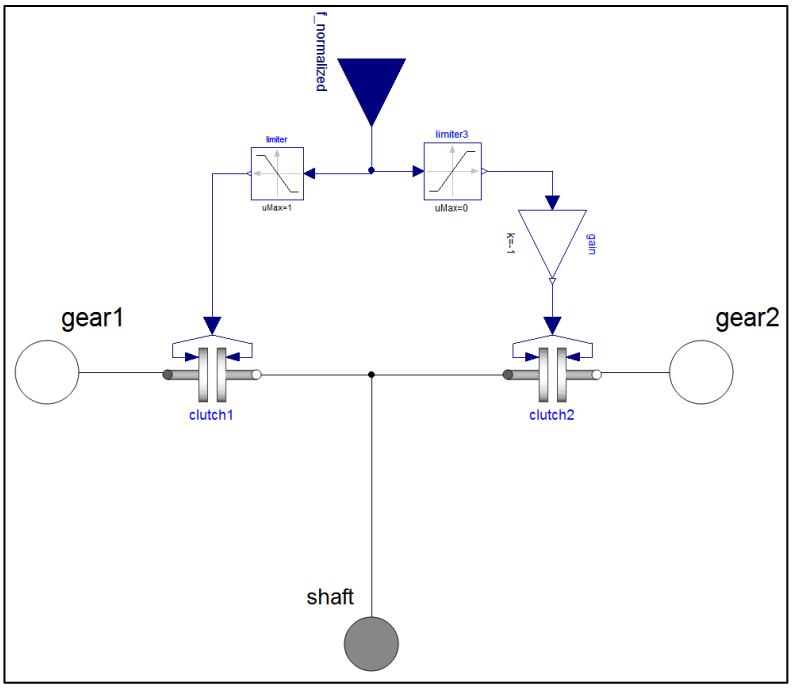

Figure 11: Synchroniser model based on dual clutch actuation

The connection between rotational connector shafts, gear 1 and gear 2 in connection depends on normalized force actuating the system. The synchroniser model is shown in Figure 11.

If $f_n > 0$: Gear 1 is connected to shaft through clutch1

If $f_n < 0$: Gear 2 is connected to shaft through clutch 2

The limiter will make sure that both clutch in general both gears are not active at the same instance. 4 synchronisers have been modelled and attached across 4 different gear sets and the control of the normalized forces are actuated from the control unit.

The entire plant model for the synchroniser actuation has been shown in Figure 12.

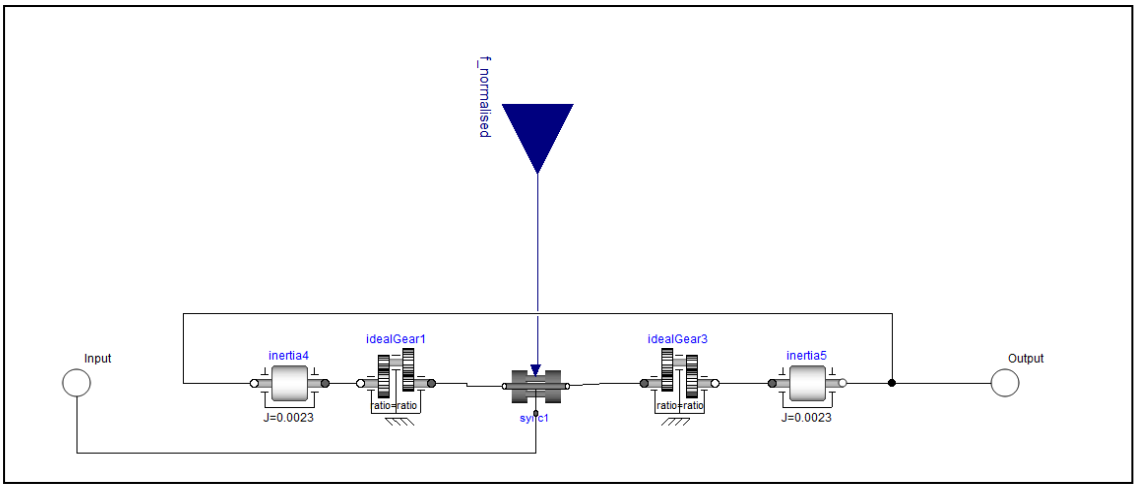

Figure 12: Plant model for synchroniser

3.2 Controller model

This section deals with the controller modelling for both the simple and advanced model. All the modelling that has been carried out in this thesis is based on ESOW(engineering statement of work) defined by CEVT.

3.2.1 Simple Controller Model

The transmission model as described above requires a control model to feed the subsystem with the appropriate gear number. The transmission control unit (TCU) controls all clutches and synchronizers. Since, the simple physical plant model is not considering the clutch and its characteristics, the simple transmission control unit model will provide only the gear number.

The first and foremost step in the control model is to consider the shifting strategy. The gear-shifting strategy is formed by logical combination of a series of independent events, which dictate the accurate instance of gear number generation and it also depends if the system is doing the upshift or down shift. This controller receives input from the system sensors like the vehicle speed and the throttle positions (accelerator). Based on these inputs, the controller calculates the actual gear number.
The upshift and downshift triggering is based on the existing vehicle speed and previous time instant vehicle speed. If the difference between the two is positive, then the system goes into the upshift loop otherwise it's goes into the downshift loop. The gear shift schedule in the thesis is described below. All 7 gears and reverse gears are generated based on this concept.

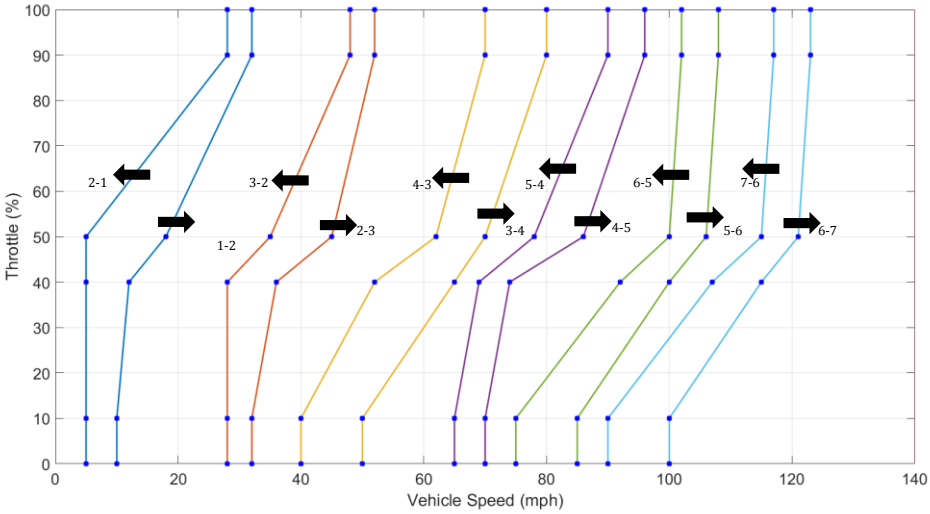

Figure 13: Gear shifting schedule

The algorithm checks if the system would to do an upshift or downshift based on the change of vehicle speed at each time interval. The control model has been modelled in Dymola which can be seen in Figure 14. For the actuation of reverse gear, the vehicle speed was considered. If the vehicle speed is less than zero, the reverse gear is actuated.

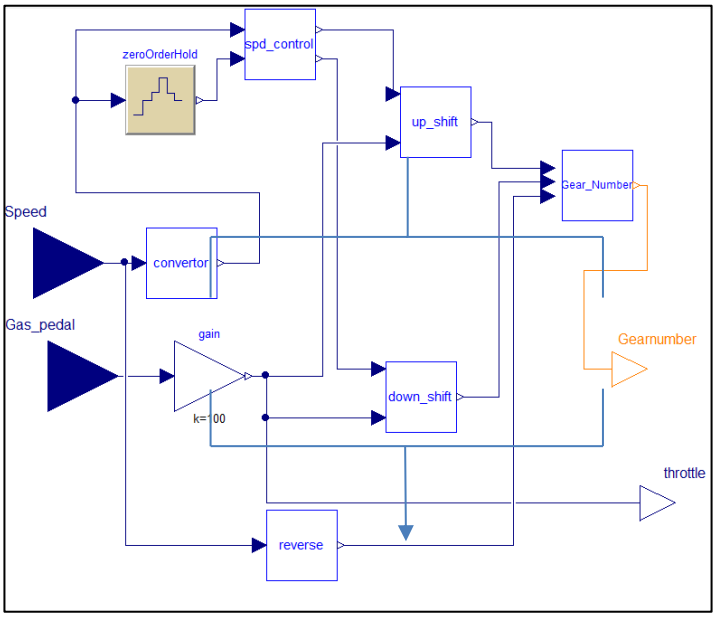

Figure 14: Control model in Dymola

3.2.2 Advanced Controller Model

The strategy does not involve any active manipulation of the engine controls such as spark advance, the controller acts in a open loop scheme where only clutch actuation pressure and synchronizers signals are varied accordingly in the gear shifts. The main functions of the controller is as follows

1) Gear selection
2) Pregear selection at the torque free half of the transmission.
3) The clutch actuations
4) Synchronizer positions

3.2.2.1 Gear selection

The Gear selection is achieved based on the speed of the vehicle, actual gear and the throttle position. Also, the gear selector stick has been considered as a input, however for running the simulations, the position for forward or rearward and neutral are considered separately, since modelling the driver inputs are not defined in the scope of the thesis. The modelling procedure for gear selection is the similar to the one used for the simple controller model as mentioned in section 3.2.1, but the model is executed in Simulink using stateflow.

3.2.2.2 Pre gear selection

The pre selection strategy ensures that the transmission runs smoothly as the next gear will be already be engaged at the torque free half of the transmission. The decision of which gear needs to be engaged is based on the speed of the vehicle and the shift schedule. For example, if the vehicle is running in the 3rd gear, the pre selection strategy selects whether gear 2 or gear 4 needs to be engaged, based on the speed. If the speed of the vehicle is increasing, the strategy engages the higher gear else if the speed is decreasing, it engages the lower gear. The pre gear selected engages once the gear shift is completed and the oncoming gear is fully engaged.

3.2.2.3 Clutch position

As the controller detects the gear change, the variables at set to examine whether up shift or downshift needs to be executed and also inspects whether the target gear is odd or even. The entire combination of gearshifts is divided into 4 branches in the state flow, as follows:

1) **Odd gear up shift**: Gear is raised to a an odd gear from the even gear number

2) **Even gear up shift**: Gear is raised to a an even gear from the odd gear number

3) **Odd gear down shift**: Gear is lowered to a an odd gear from the even gear number

4) **Even gear down shift**: Gear is lowered to a an even gear from the odd gear number

Up shifts: The up shift strategy can manage only single gear shift at a time. For example the strategy can manage single gear up shifts like 1-2, 2-3, 3-4 and so on. It has not been designed to manage a multiple gear shifts. This is one of the limitation of the model, because the real gearbox is capable to handle multiple gearshifts, considering the wide scope of the thesis, only single gear shift was taken into consideration. The controller outputs the value of normalized clutch pressure position. As the signal of

the gear shift of the up shifts is detected, the oncoming clutch is raised to half of the full clutch capacity in 0.3s. The off going clutch is dropped in the same duration time to zero. Assuming the velocity of the vehicle is constant during the gearshift, as the controller is calculates the target gear engine speed which needs to engaged by the equation (21).

$$i_a \cdot \omega_{e_a} = i_b \cdot \omega_{e_b} \tag{21}$$

When the engine speed in the next gear is determined, a target clutch torque T_{cl} can be computed based on the engine speed difference and the desired shift time as in the equation (22). Also it is assumed that the engine torque is constant during the shifting and the clutch actuation is immediate.

$$\boldsymbol{I_e \cdot \frac{d\omega_e}{dt} = T_e - T_{cl_{oncoming}}} \tag{22}$$

The target clutch torque is converted to clutch pressure and applied until the slip between the engine and respective clutches reduces below 1 rad/s. Then the clutch is maintained in full capacity. The clutch capacity is maintained in the same clutch engagement pressure until another gearshift had been detected.

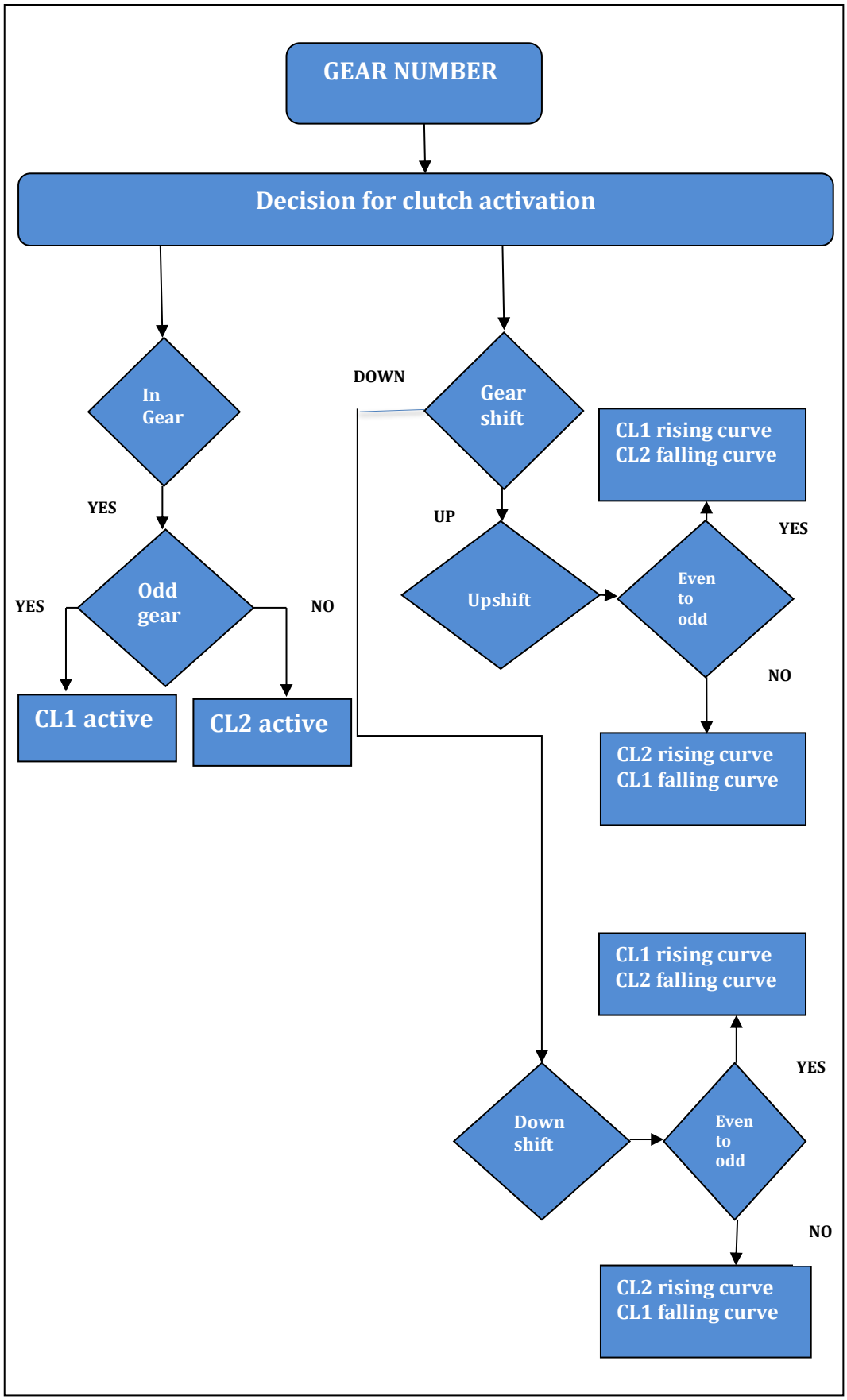

Figure 15: Flow chart for clutch position

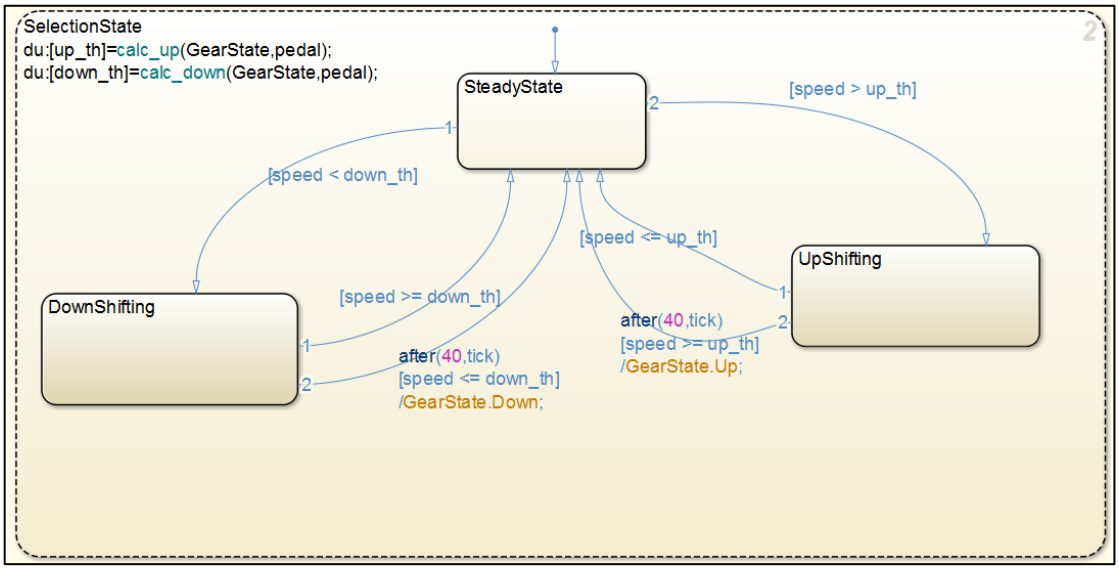

Figure 16: Downshifting and upshifting block in simulink

Downshifts: As similar to up shifts, the controller can only manage single downshifts. Multiple downshifts are not taken into consideration. Once the signal for the downshift is detected, using (21), the controller calculates the rotational velocity of the engine after the gear shift. The oncoming target clutch torque is calculated in same manner as the up shift. The calculated clutch torque is converted into normalized clutch pressure, and then input to the clutch physical plant model. The controller allows the oncoming clutches to engage in the duration of 0.3s. The oncoming clutch is raised until the absolute value of slip between the engine side and gearbox reduces below 1 rad/s. The off going clutch is also simultaneously dropped to zero clutch capacity during the same duration. Later, the oncoming clutch is maintained until next gear shift detected.

3.2.2.4 Synchroniser signal

The synchroniser is modelled as a clutch elements, the synchronizer signal ensures that the synchroniser is either complete engaged or disengaged. The transition is not considered in the control strategy. Two functional blocks, the current gear signal and the preselected gear signal dictates the synchroniser signal. There are four synchronisers which are individually varied. For example, the synchroniser between the gear 1 and gear 3, gear 1 has the signal as 1 at completely engagement and gear 3 has the signal -1 at complete engagement. Thus the synchroniser signal is strictly constrained to 1,-1 or 0.

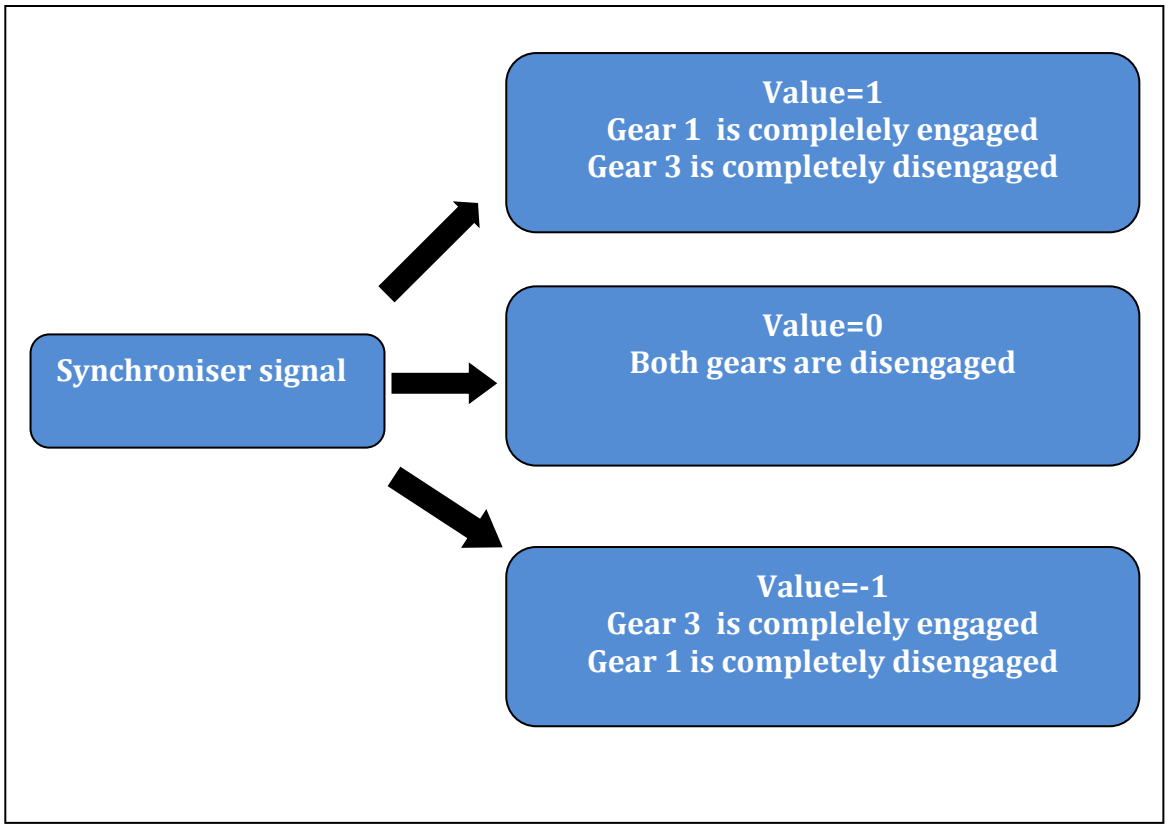

Figure 17: Flow chart for synchroniser position for shift 1-3

4 Simulation Results and Discussion

To run the simulations, FMU were generated from the Dymola environments. The developed vehicle model for a midsize demo car from the IPG Carmaker module is equipped with dual clutch transmission. The vehicle data that has been used in the model is listed out in Table 1.

Table 1: Vehicle Data

Variable	Value
Vehicle mass	$1301\ kg$
Tire data (all 4 tires)	$\mathrm{RT}\ 195/65\mathrm{R}15$
Differential moment of inertia	$0.0047\ kg\ m^2$
Transmission gear ratio	As per CEVT requirements
Final drive gear ratio	As per CEVT requirements
Odd gears moment of inertia	$0.0023\ kg\ m^2$
Engine moment of inertia	$2.7\ kg\ m^2$
Solid shaft moment of inertia	$0.008\ kg\ m^2$
Hollow shaft moment of inertia	$0.001\ kg\ m^2$
Intermediate shaft moment of inertia	$0.008\ kg\ m^2$
Even gears moment of inertia	$0.0009\ kg\ m^2$

In Dymola, its not possible to model a physical system without adding the inertia block in between the components, all the inertia were not provided by CEVT,thus the inertia values based from a reference.[16].

4.1 Simple Model

The simulation was carried out in IPG Carmaker. In order to check the robustness of the models, a straight manoeuvre on extreme road setup has been assumed. The simulation environment was setup with the vehicle made to run from stand still on a flat road to cover a distance of 1200 m and then a road gradient of 40% for a distance of 500 m. In order to evaluate the variation of the torque and angular velocities, the full throttle condition is maintained throughtout the simulation. The total simulation required approximately 45 s for the entire road condition. In order to evaluate the torque and angular velocity at the gearshifts, the full throttle condition is maintained in the entire run of the simulation and vehicle starts from stand-still.

The maximum speed that the car can travel has been set to 200 kmph. Default car (Demo car) from IPG Carmaker was used for the simulations. The FMU generated from the Dymola environment for both the plant and controller model of the transmission system were imported into this environment. The environment can be seen in Figure 18.

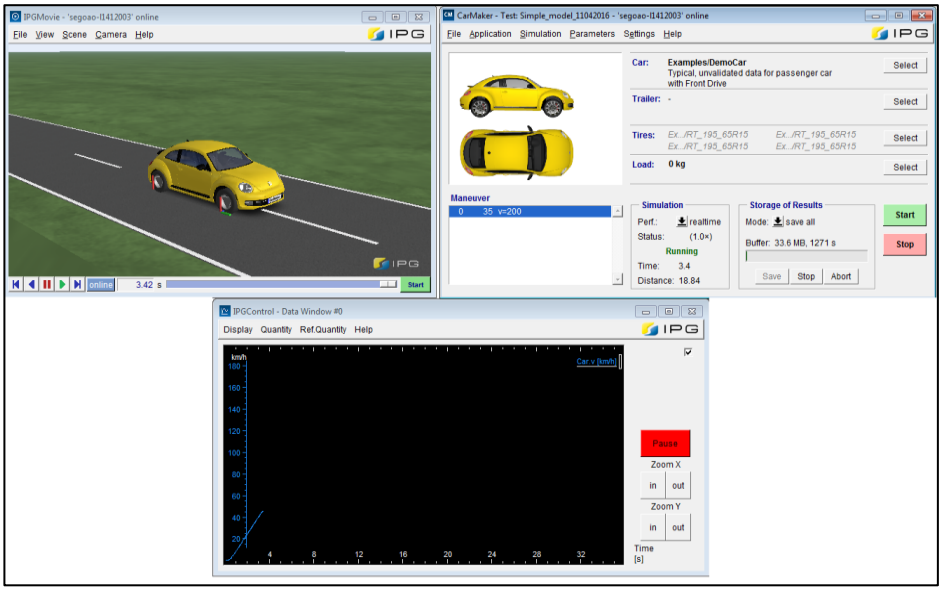

Figure 18: IPG Carmaker Environment

The simple engine model has also been imported into IPG Carmaker as a Functional mockup unit. As discussed in section 2.2.1, the gear number shifts are based on the vehicle speed and the throttle position. The simulation results have been discussed below.

Below in Figure 19 we can see the shifts from gear number 1 to gear number 7 and then downshift from gear 7 to gear 3.

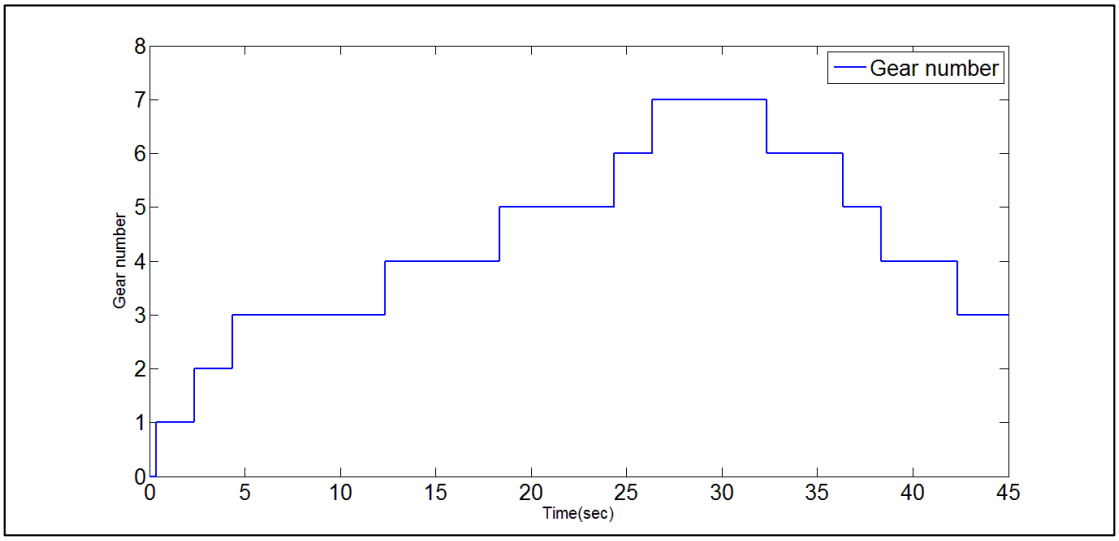

Figure 19: Gear shifting in the system

The input and the output torque characteristics can be seen in Figure 20. It is interesting to note that though the simple plant model doesn't use clutch for the simple model and hence there is no interruptions in the torque characteristics, since, its direct transfer of torques based on the actuation of the gear number.

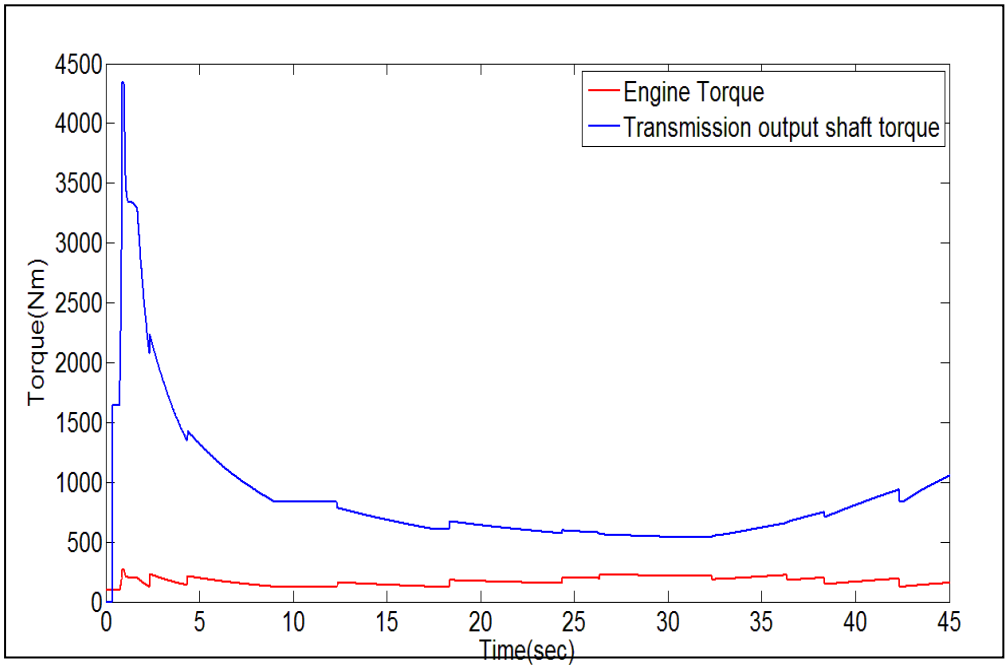

Figure 20: Torque characteristics of simple model

On observing the angular velocity profile, we can see the variations in the engine speed when the gear shifting occurs. The output angular velocity from the gearbox is smooth which can be evident from the vehicle speed profile shown in Figure 22.

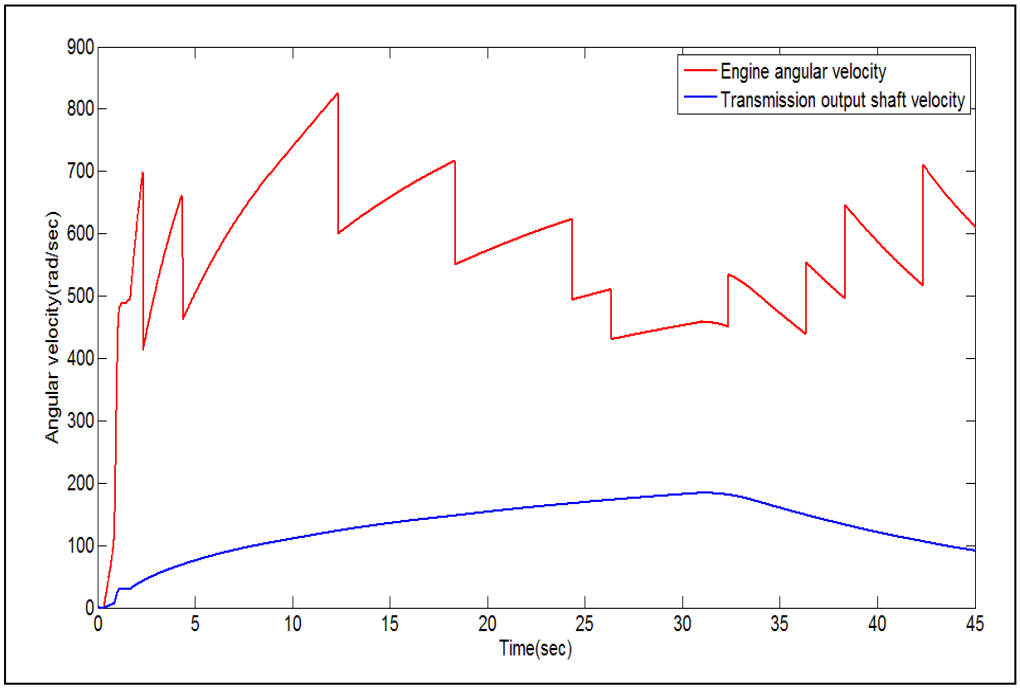

Figure 21: Input and Output Angular velocity across the gearbox

As described above, the vehicle goes upto 193 kmph. After that due to the change in the road gradient, the vehicle speed is decreased and hence, downshift occurs as seen above. The vehicle speed profile can be seen Figure 22.

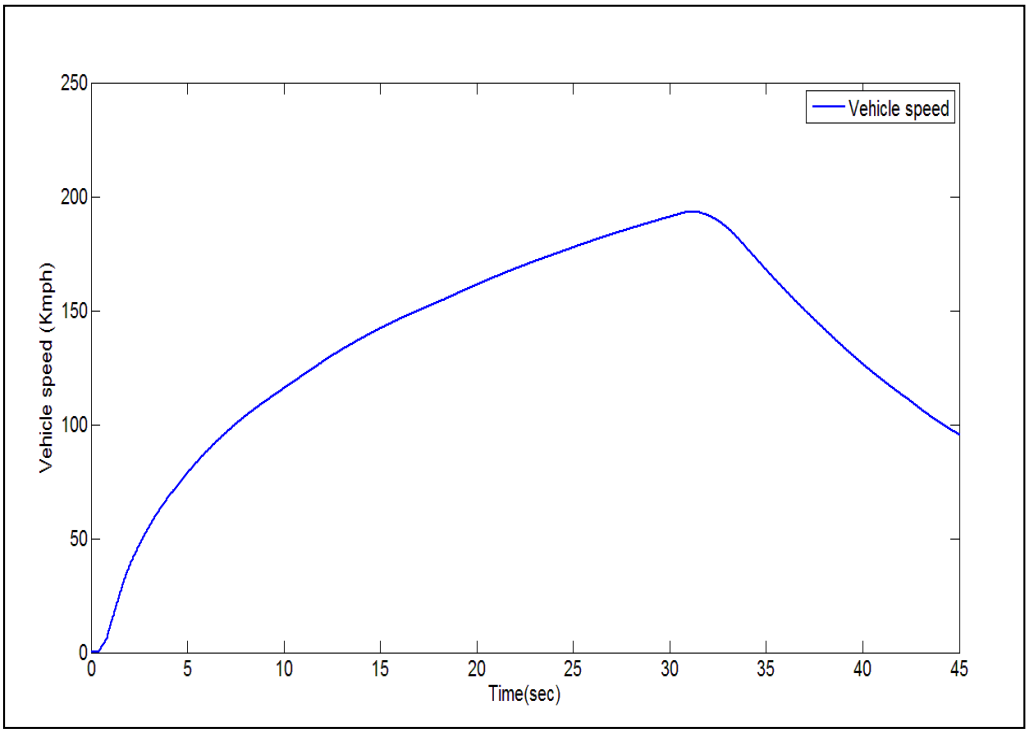

Figure 22: Vehicle Speed variation of the simple model

4.2 Advanced model

The simulation results for the advanced model have been discussed in this section. The simulation conditions are the same as stated in the simple model. The simulation environment was setup with the car made to run on a flat road to cover a distance of 1200 m and then a road gradient of 40% for a distance of 500 m to evaluate the robustness of the system. The total simulation required approximately 48 s for the entire road condition. In order to evaluate the torque and angular velocity at the gearshifts, the full throttle condition is maintained in the entire run of the simulation.

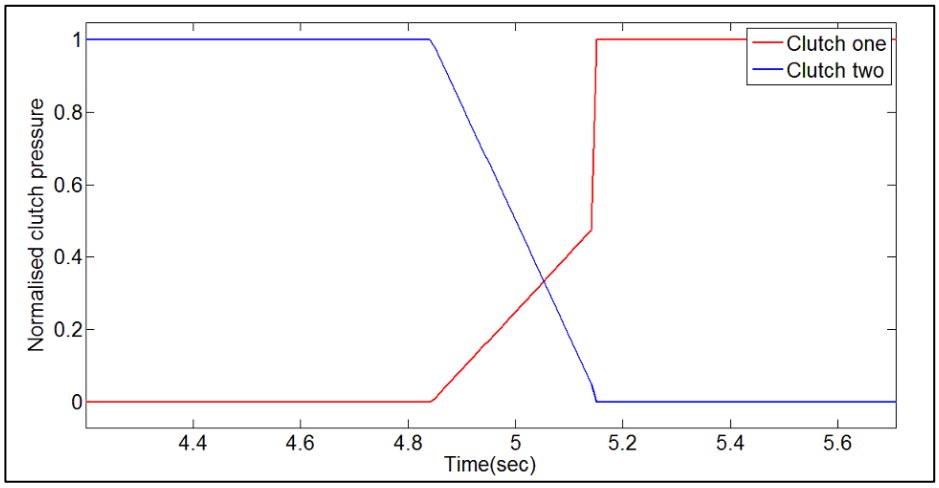

Figure 23:Normalized clutch pressure variation during an upshift from 2-3 gear

4.2.1 Gear upshifts

The Figure 23 shows the normalized pressures of the two clutches during the 2-3 upshift, once the signal for the gear change is detected, the pressure of the odd clutch is increased to at every time step for 0.3 s, the controller makes sure that the clutch pressure reaches half of the capacity (0.5). Simultaneously the off going clutch (clutch two) is dropped to zero in the span of 0.3 s. Then by calculating the target clutch pressure, the controller applies the pressure until the relative angular velocity between the on the both sides of the clutch reduces below 1rad/s.

Figure 25 shows the relative angular velocity across the oncoming and off going clutches. Then the clutch pressure is held till the next gear shift.

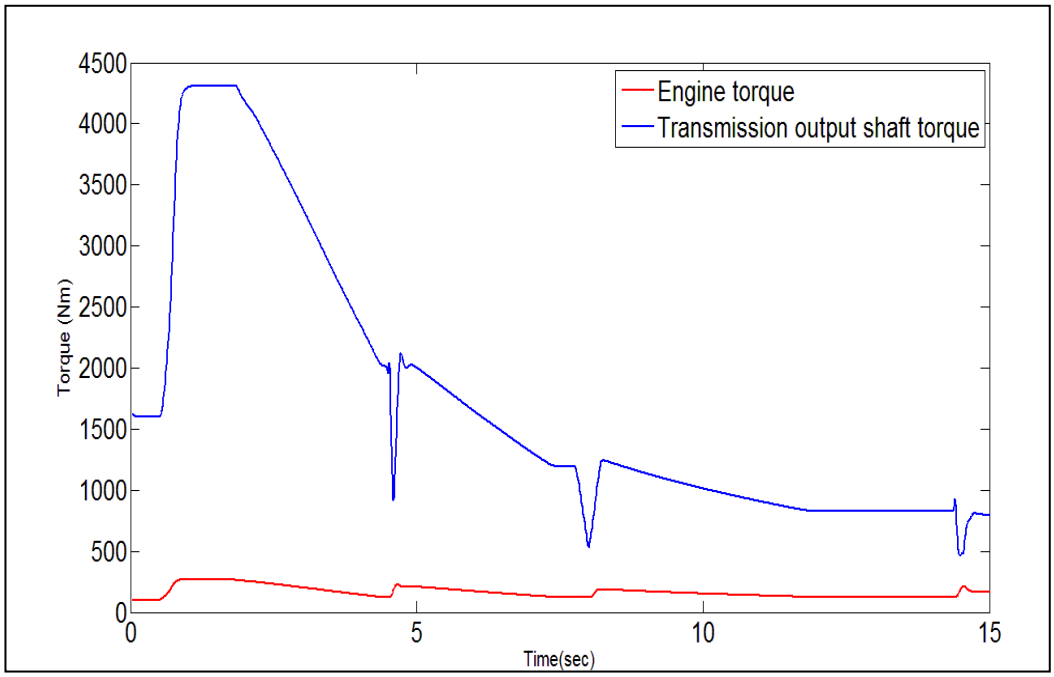

Figure 24: Torque characteristics during upshifts

The 2-3 Upshift occurs at the time 4.8 s, Figure 24 shows the output torque during the shift, the transfer of engine torque between two clutches results to a drop in transmission output torque according to the respective gear ratio. The oscillations a observed in output torque curves even though the elastisities are not modelled, it may be due the elastisities present in the IPG Carmakers's chassis model or due the numerical errors introduced during the simulations.

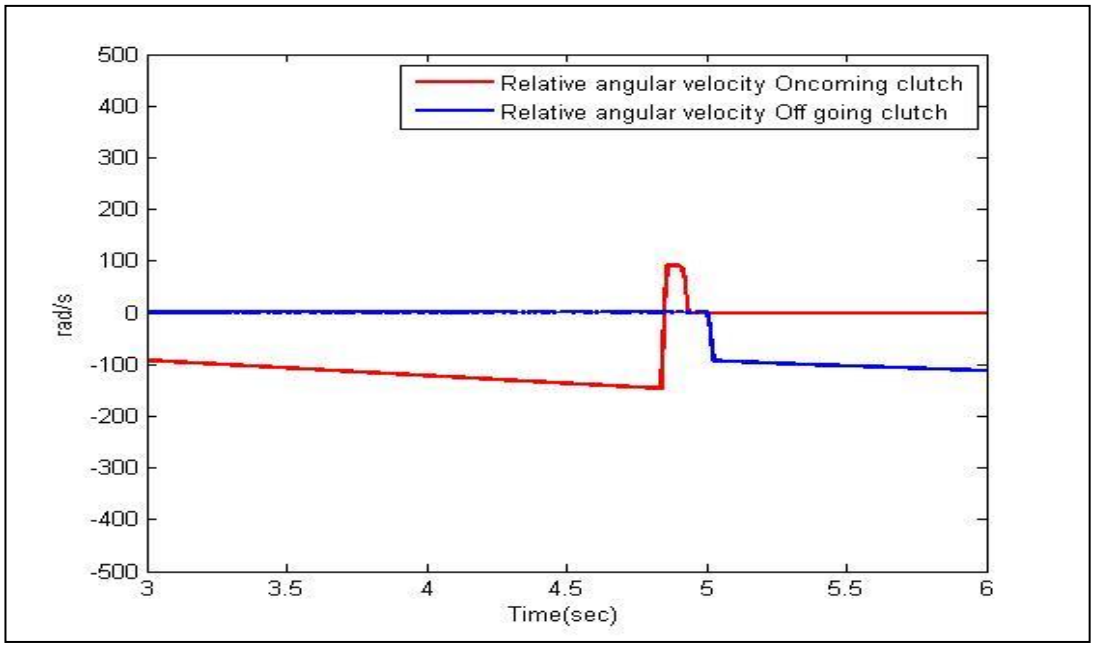

Figure 25: Relative angular velocity variation across the clutches during the upshift from 2-3 gear

4.2.2 Gear downshifts

Figure 26 shows the normalized pressures of the two clutches during the 4-3 upshift. The downshift can be either initiated by reduction in the vehicle speed, the vehicle is made to run in an uphill scenario in the IPG Carmaker simulation setup. The 4-3 Downshift occurs at 42.3 s in the simulation.

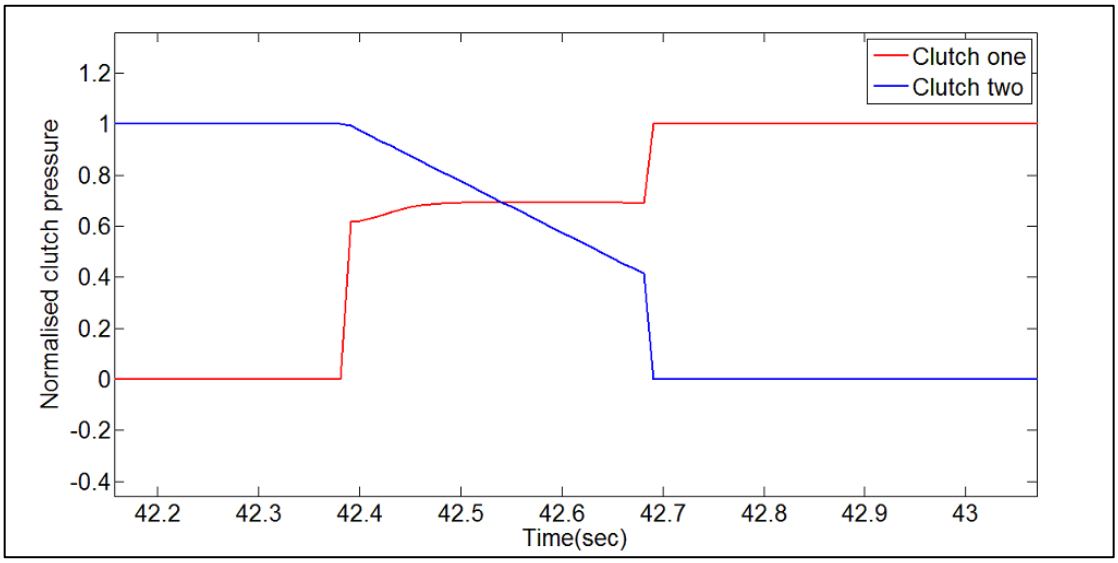

Figure 26: Normalized clutch pressure variation during downshift from 4-3 gear

As seen in Figure 26, the oncoming clutch takes 0.3 s to apply the target clutch pressure and in turn overcome the relative angular velocity between the clutch, in the same time duration the off going clutch is dropped to zero. The output transmission torque values experiences a hump as the clutch pressure of the oncoming clutch increases, then maintains the torque value according to the gear ratio as seen in Figure 27.

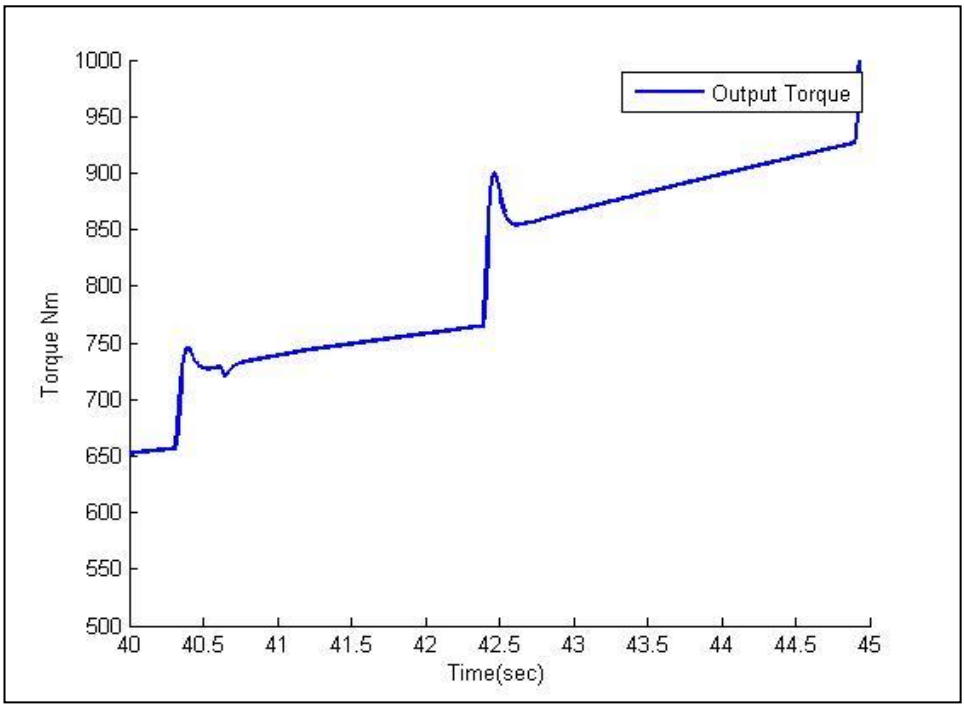

Figure 27: Torque characteristics during downshifts

Figure 28 shows the relative angular velocity across the oncoming and off going clutches.

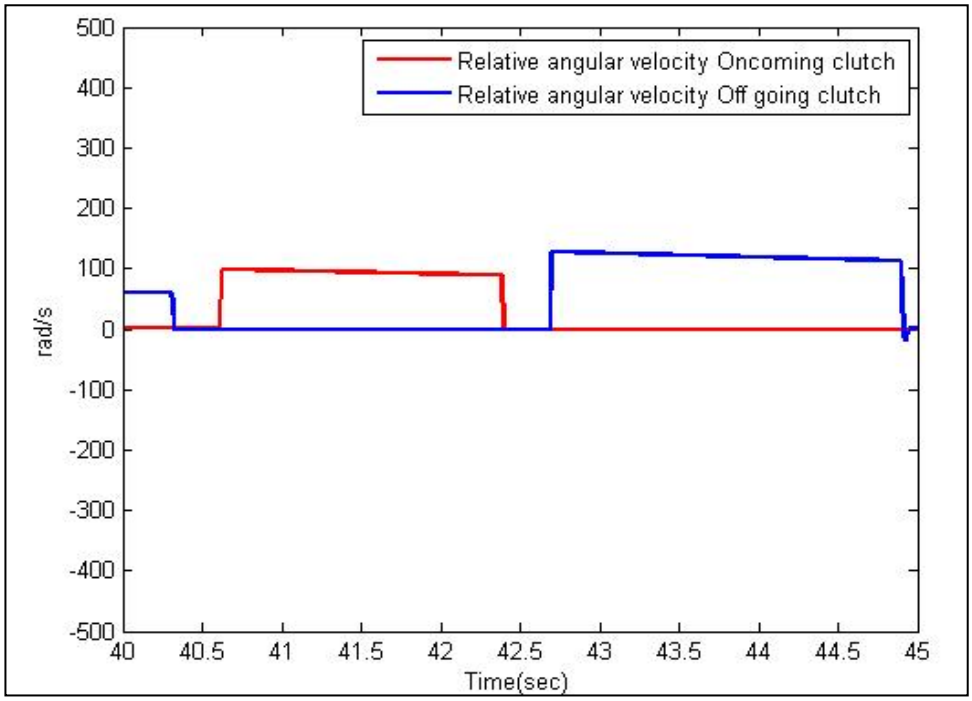

Figure 28: Relative angular velocity avriation across the clutches during the downshifts

4.2.3 Synchroniser signal

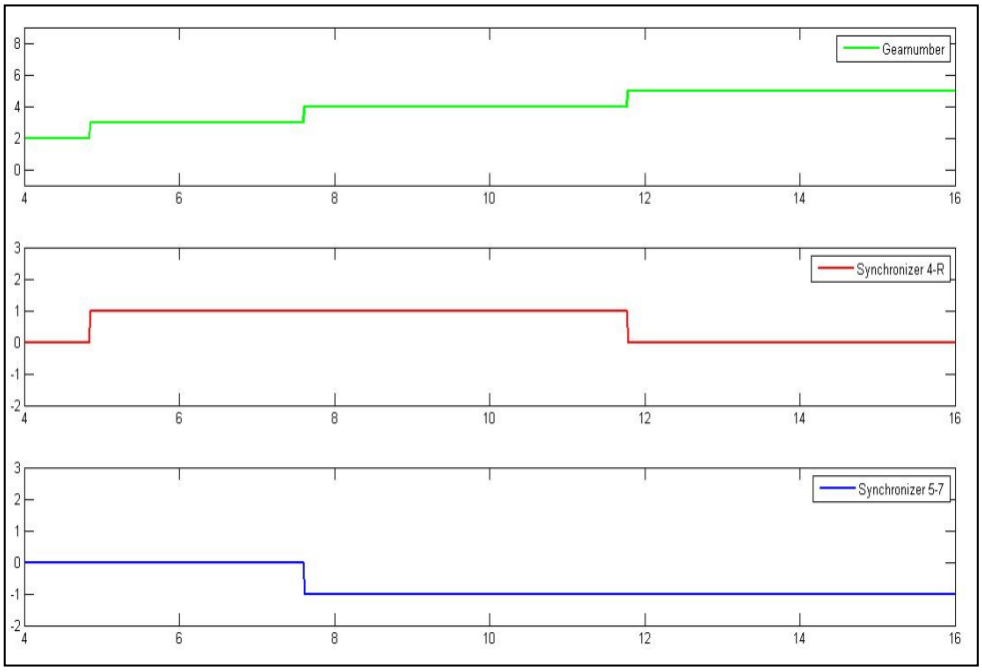

Figure 29: Synchroniser and gearnumber signal during upshifts

The Figure 29 shows the gear number and synchroniser signals, as explained in the physical modeling, 1 and -1 denotes the complete engagement of the synchroniser towards one side hub comprising of two gears. In synchroniser 4-R, 1 signifies that synchroniser is meshed to the gear 4, -1 signifies that synchroniser is meshed to reverse gear. In same way, 1 in synchroniser 5-7 shows that synchroniser is meshed to the gear 7,-1 shows that that synchroniser is meshed to the gear 5.

In the simulation, at the time 5 s the vehicle shifts to gear 3, at the same instant the synchroniser meshes with the gear 4 which marks the preselection at the torque free half of the transmission. The synchroniser at gear 4 will be meshed until the gear shifts to gear 5. The process is achieved at synchroniser 5-7, as the gear shifts to 4, the synchroniser at gear 5-7 hub meshes with gear 5 and continues to be engaged until the vehicle shifts to gear 6.

In the similar manner, respective synchronizer are triggered based on the gear number and the speed of the vehicle, In the event of downshifts the respective lower gear's synchronizers are triggered to ensure smooth torque transfer. The Figure 30 signifies the same.

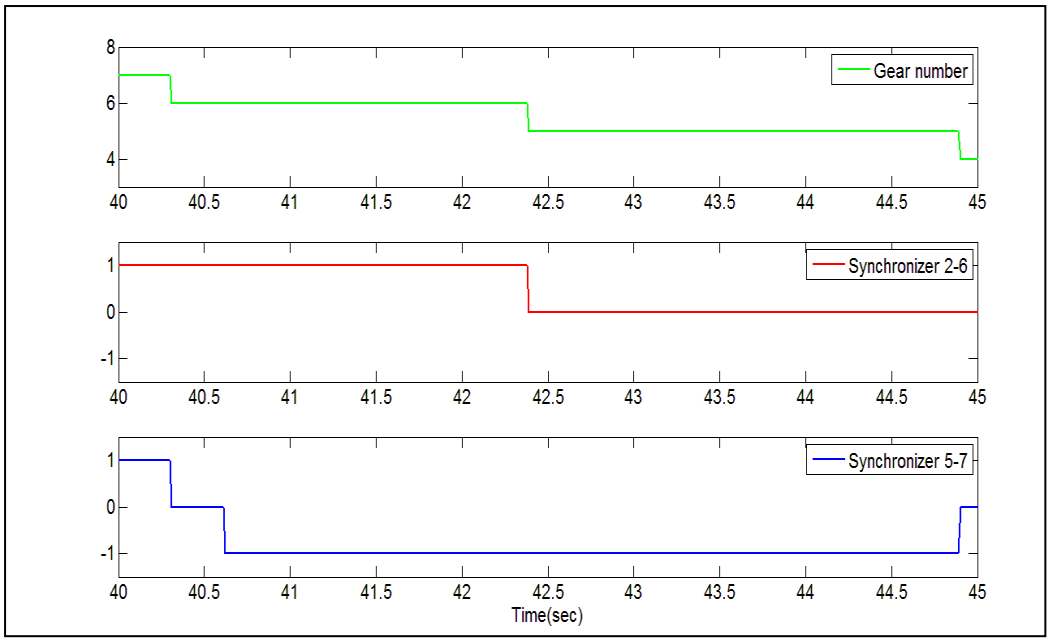

Figure 30: Synchroniser and gearnumber signal during downshifts

4.2.4 Complete maneuver simulation results

The input and the output torque characteristics across the entire simulation cycle is shown in Figure 31: Simualtion results from the Advanced model.

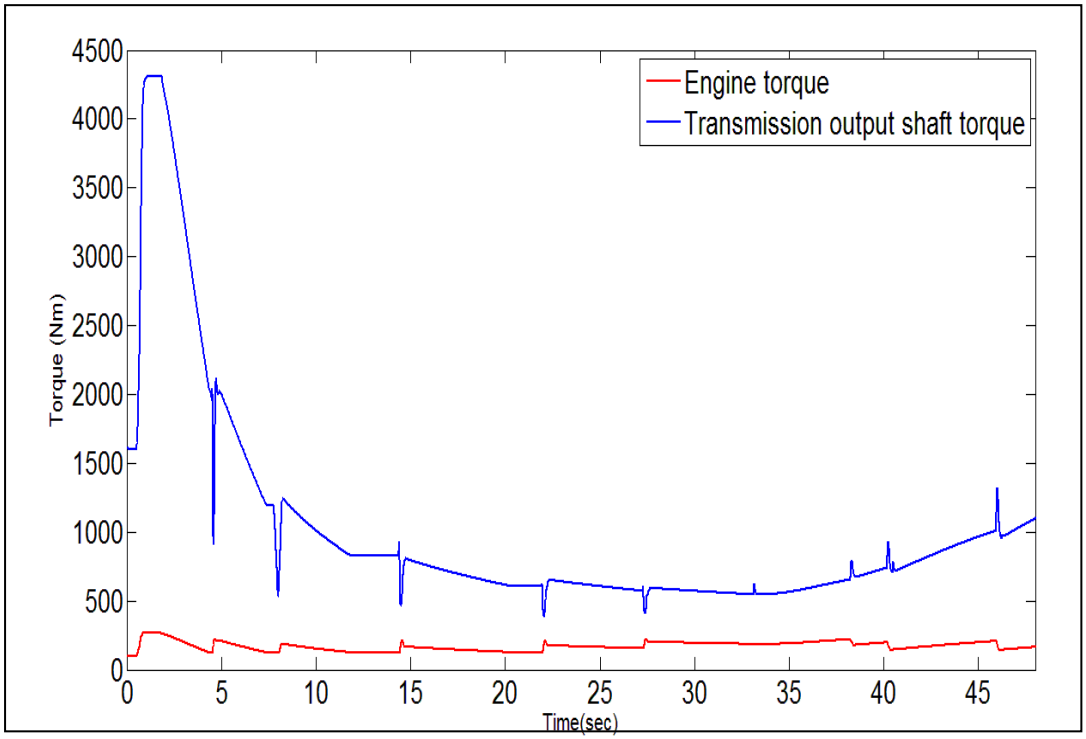

Figure 31: Simualtion results from the Advanced model

The engine speed and the transmission output shaft velocity characteristics is shown in Figure 32 .

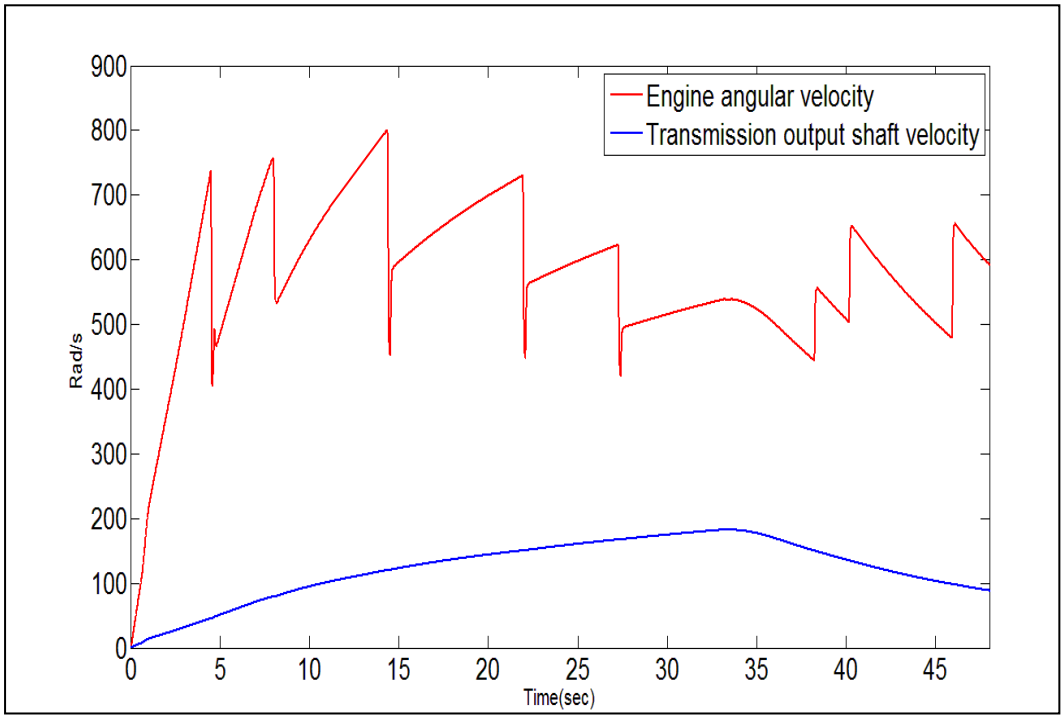

Figure 32: Engine speed and transmission output shaft velocity curve

The vehicle speed goes up to a maximum speed of 191 kmph. The profile across the simulation is shown in
Figure 33.

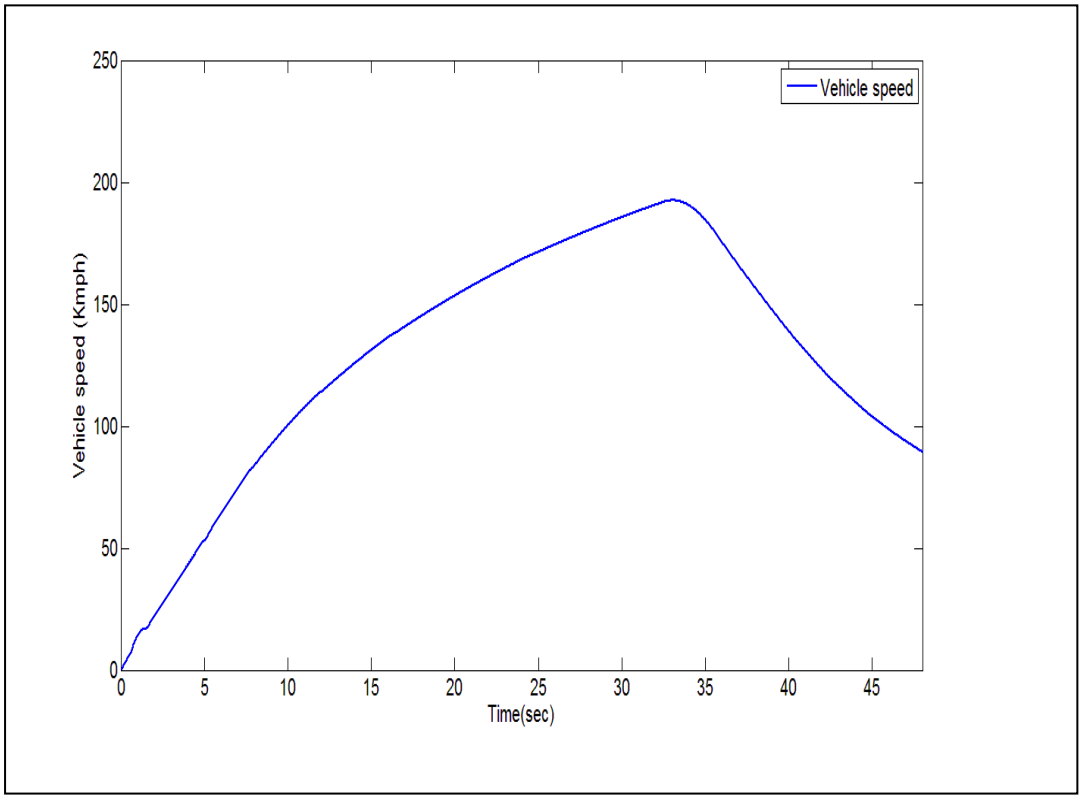

Figure 33: Vehicle speed profile for the advanced model

The input and the output torque characteristics across the entire simulation cycle is shown in Figure 32. On comparing the torque characterstics of the simple model in Figure 20, the torque loses are evident during the gearshifts in the advanced model as the advanced model considers the inertia and the controller takes into account the clutch and synchronizer position. The similar kind of variation is observed in the engine speed profiles between the simple and advanced models.Also, the acceleration during the first 2-3 gear shift is much lower for advanced model since the engine inertia is not taken into account in the simple model.

For the entire simulations, a normal personal computer was used. The configuration of the system are:

Processor: Intel(R) Xeon(R) CPU E5-1620 0 @3.60 Ghz
Ram: 8 GB
System type: 64-bit operating system

The simple model was able to process upto 9 times faster than real time whereas the advanced model was processing upto 4.6 times faster than the real time. The total computational time for the simple model was 43 s whereas the advanced model took 50 s to complete the simulation at the above mentioned processing speeds. When the system was running at real time simulations, the simple model took 83 s whereas the

advanced model took 88 s. The initiation time or the preparation time for both the models were close to 40 s.

4.3 Vehicle Simulator

As part of the scope of the thesis, all the three master thesis which are propulsion, steering and braking systems have been integrated and simulations have been performed by developing a simulator. Carmaker for Simulink blocks has been used to generate the integration platform across the simulator environment and the carmaker.

The simulator environment consists of Logitech G25 system. It has an electronic steering wheel, an accelerator pedal, brake pedal, clutch pedal and paddle shifter. Only the first three is used for the simulations since the gearbox is dual clutch automatic transmission. The left side of the
Figure 34 shows the different parts of the simulator. When the drivers actuates the accelerator pedal, the same response is fed into Simulink which is connected across the carmaker environment and hence is connected across the models developed by each of the individual thesis work. The same happens when the brake and steering is actuated.



Figure 34: Vehicle simulator environment

Hence, the driver model in the carmaker has been replaced by the external driver which acts as a simulator to run different simulation environments. The right side of the
Figure 34 depicts a scenario where in we can see the carmaker environment on the PC and simulator is connected across the system.

The input from the actual driver is accurate compared to the IPG Driver module signal during the maneuvers. Both forward and rearward gear actuation were evaluated using the simulator,As previously stated, since it is a automatic transmission, the

driver only handles the brake and accelerator pedals and the gear lever in order to change from forward gear to rearward gear and vice versa.

5 Conclusion

This thesis is aimed at understanding how the vehicle performance can be studied. Virtual vehicle architecture will hence, form as a platform to do vehicle level simulations. As the objective of the thesis was, five simulation models have been developed and validated across different platforms and then integrated with CarMaker to verify the performance of the vehicle.

As per the CEVT requirements, the simple and advance physical models of the propulsion were modeled using Dymola and the respective controller is designed in Matlab/Simulink. The model based development of the propulsion subsystem aids in the virtual vehicle evaluation. IPG Carmaker provided the effective environment for the evaluation of the models.

IPG Carmaker has been designed for a single clutch transmission, hence the all interface variables except few could not be used as thesis focused on the dual clutch transmission. Driver model has been designed accompanying these interface variables, which was not possible to mimic for a dual clutch transmissions.

During the course of the thesis, in order to observe the interaction of the physical model and the controller, the functional mockup interface unit of the physical model was exported to Simulink. Hence it was found to be a efficient practice to evaluate the interaction in simulink and tune the controller before exporting the plant model and the controller into IPG Carmaker.

Simulation results verifies that the models which are generated as a functional mockup units can be integrated in IPG Carmaker. The concept of FMUs co- simulation provided the necessary platform to reap the benefits from the equation based modelling (Dymola) and the algorithm based modelling (Simulink) simultaneously. Considering the wide scope of the thesis, the focus was on using simple plant model with the simple controller and advanced plant model with advanced controller, in the future, based on the level of analysis required, the combination can be altered.

Both simple and advanced models have been tested in the simulator by replacing the IPG Carmaker driver's input with actual driver inputs, the models behaved as intended. It was able to run the simulations with respect to simple and advanced models in real time.

Thus, the integration between the models of other subsystems was achievable.The Modelica model is verified to be tool independent, since they are run both in Dymola and SimulationX [17].

6 Future Work

This section describes the recommendation which has been suggested to CEVT and the future work that could be carried out across different sections including engine and transmission systems in order to improve the quality of propulsion models.

Engine:

A simple engine has been modelled in this thesis which is a lookup table and gives out torque by interpolating depending on the engine angular speed and the pedal position. There is a lot of scope involved in it and since there was no requirement from CEVT on the engine, the model is very primitive. The model needs to consider the exact physical aspect involved in the torque generation which includes the turbo characteristics. Also, the engine damping and the mounting characteristics which determine the engine inertia has to be modelled.

Transmission:

The synchronizers have be modeled as clutch elements due to the lack of information on the synchronizers teeth profile and due to the wide scope of the thesis. Also, the synchronizers are assumed to either complete engaged or disengaged, thus hydraulic modeling of the synchronizer actuation and clutch actuation would lead to more accurate results.

Multiple gear shifts: the unique transmission setup of the DCT makes it hard to achieve the multiple gearshifts while using the simple clutch –clutch shifts. The design of an enhanced controller can aid in achieving the multiple gear shifts.

Simulations:
If the simulation complexity is high with regard to step size and maneuver, residual errors were encountered. The residual errors had no significant effect on the simulations. However, scheduling between the FMUs can aid the process in solving the residual errors.

Virtual vehicle architecture

The co existence of different types of subsystems in the vehicle (Propulsion, Brakes etc) as well as simple and complex models of each subsystem increases the complexity of Virtual vehicle architecture. In future work, it would be necessary to study the relationship and decide the right combination. The model library needs to organised on the below factors

- Different variants of subsystem(For propulsion :engine sizes ,gearbox types, hybrids, front wheel drive , all wheel drive etc)
- Investigate whether combination of simple and advanced model of different subsystems work. Such as combination of simple propulsion model with advanced brake model.

- Feasibility of combining the simple and advanced model within a subsystem. Such as combining simple controller with advanced plant model.
- Different versions will always be needed to handle, through the vehicle development and life-time, from pre-study phase to start of production, or even after start of production.
- Different versions need to be considered, throughout the entire life cycle of vehicle development i.e. from pre study phase to production stage.
- In real vehicle program, many advanced subsystems models comes from supplier, this drives a need for black-box models. At the same time simpler models are obtained from vehicle manufacturers.For the whole setup to work ,there is a need of standardization/adaptation between the suppliers and vehicle manufacturers. Can one agree on the common interfaces or is there a need for 'wrappers', which would be vehicle manufacture specific ?

The requirements currently supplied to the suppliers is the form of text data which is taxing to understand andmto interpret according to the needs. The future thought is to supply the models as a FMU instead of the text specification to the suppliers and convey the required task or performance change with respect to the model.

7 References

[1] Modelica Association, “Modelica specification version 3.3”, https://www.modelica.org/documents/ModelicaSpec33.pdf

[2] MODELICA — THE NEXT GENERATION MODELING LANGUAGE AN INTERNATIONAL DESIGN EFFORT Hilding Elmqvist , Sven Erik Mattsson Dynasim AB Research Park Ideon SE-223 70 Lund.

[3] Simulation Model Development of Vehicle Dynamics/Brakes, Akshay, Karthikeyan Shanmugan(not published)

[4] Electric Power Steering Model Development for Virtual Validation Architecture, Hanjie Xu(not published)

[5] The Functional Mockup Interface for Tool independent Exchange of Simulation Models T. Blochwitz , M. Otter , M. Arnold , C. Bausch , C. Clauß , H. Elmqvist , A. Junghanns, J. Mauss , M. Monteiro, T. Neidhold , D. Neumerkel , H. Olsson , J.-V. Peetz , S. Wolf

[6] Huang, H., Nowoisky, S., Knoblich, R. and Gühmann, C. (2015) ‘Multi-domain modelling and simulation of an automated manual transmission system based on Modelica’, *Int. J. Simulation and Process Modelling*, Vol. 10, No. 3, pp.253–264.

[7] G. Lechner, H. Naunheimer, Automotive Transmissions: Fundamentals, Selection, Design and Application, Springer, Berlin, New York, 1999.

[8] M.A. Kluger, Denis M. Long, An Overview of Current Automatic, Manual and Continuously Variable Transmission Efficiencies and their Projected Future Improvements, SAE paper 1999-01-1259, 1999.

[9] W. Grobpietsch, T. Sudau, Dual Clutch for Power-Shift Transmissions – A Traditional Engaging Element with New Future, VDIBerichte Nr. 1565, 2000, pp. 259–273.

[10] P.D. Walker et al. / Mechanical Systems and Signal Processing 25 (2011) 1923–1936.

[9] Lovas, L., Play, D., Marialigeti, J. and Rigal, J.F. (2006) ‘Mechanical behaviour simulation for synchromesh mechanism improvements’, Proceedings of the Institution of Mechanical Engineers, Part D: Journal of Automobile Engineering, Vol. 220, No. 7, pp.919–945.

[11] Zoppi, M., Cervone, C., Tiso, G. and Vasca, F. (2013) ‘Software in the loop model and decoupling control for dual clutch automotive transmissions’, in 2013 3rd International Conference on Systems and Control (ICSC), October.

[12] Galvagno, E., Velardocchia, M. and Vigliani, A. (2011) 'Dynamic and kinematic model of a dual clutch transmission', in Mechanism and Machine Theory, Vol. 46, No. 6, pp.794–805.

[13] Jiang, M., Chen, W., Zhang, Y. and Chen, L. (2011) 'Multi-domain modeling and simulation of AMT based on Modelica', SAE 2011 World Congress & Exhibition.

[14] https://en.wikipedia.org/wiki/Simulink

[15] https://en.wikipedia.org/wiki/MATLAB

[16] Manish Kulkarni, Taehyun Shim, Yi Zhang. (2007) 'Shift dynamics and control of dual-clutch transmissions', in Mechanism and Machine Theory, Vol. 42,pp. 168-182.

[17]https://www.simulationx.com/simulation-software/experts/modelica-simulation.html

8 Appendix

8.1 Dymola environment for simple model

1. Simple Engine model

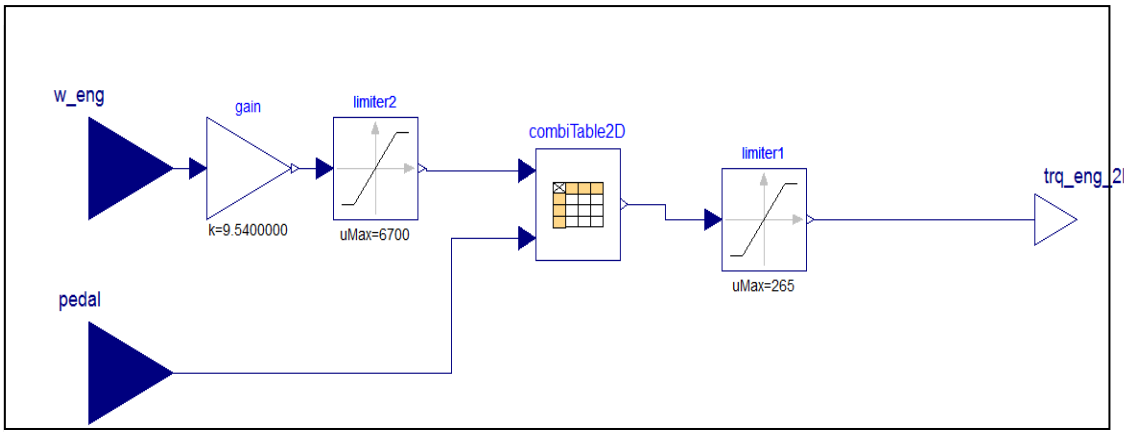

Figure 35: Simple engine model in Dymola

2. Simple gearbox model

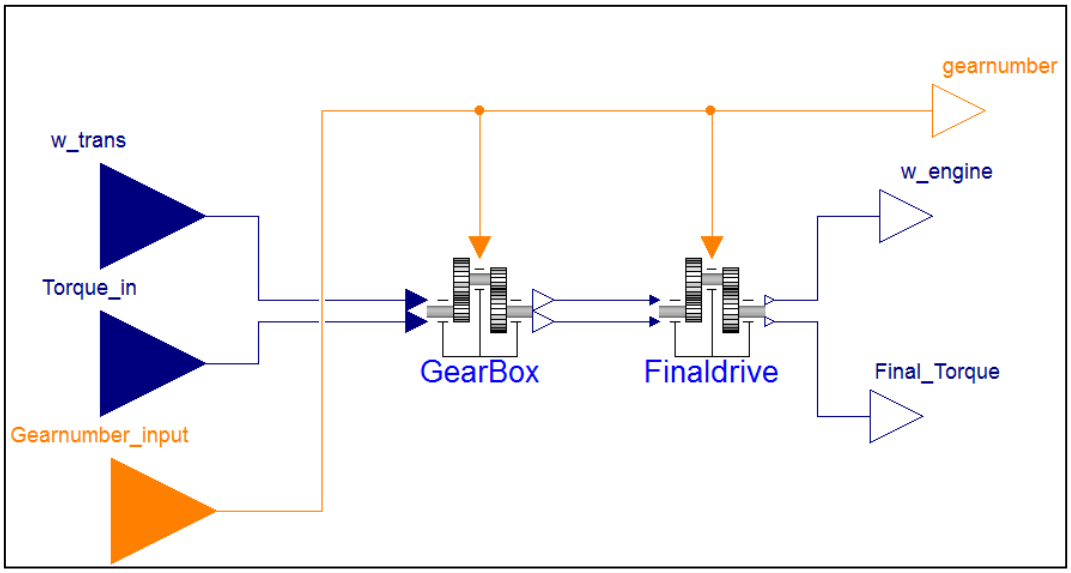

Figure 36: Simple gearbox model in Dymola

8.2 Simulink environment for advanced model

3. Transmission control unit

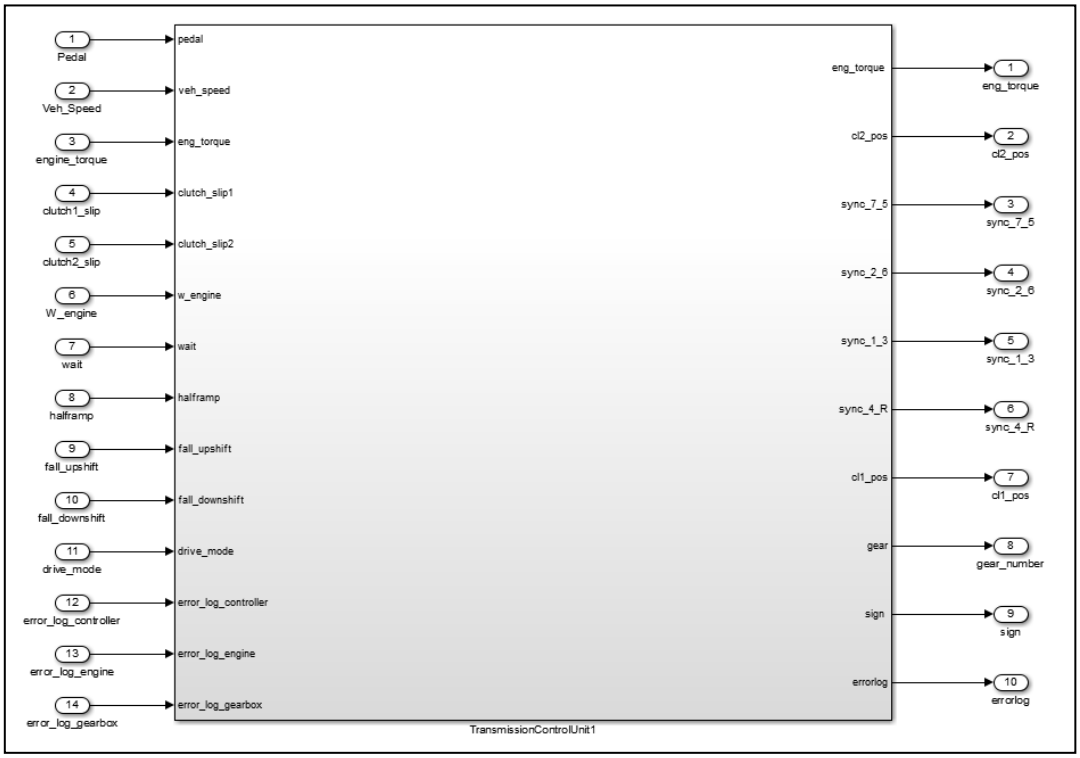

Figure 37: Transmission control unit in Simulink

a) Gear and pregear control for one of the gear shifts

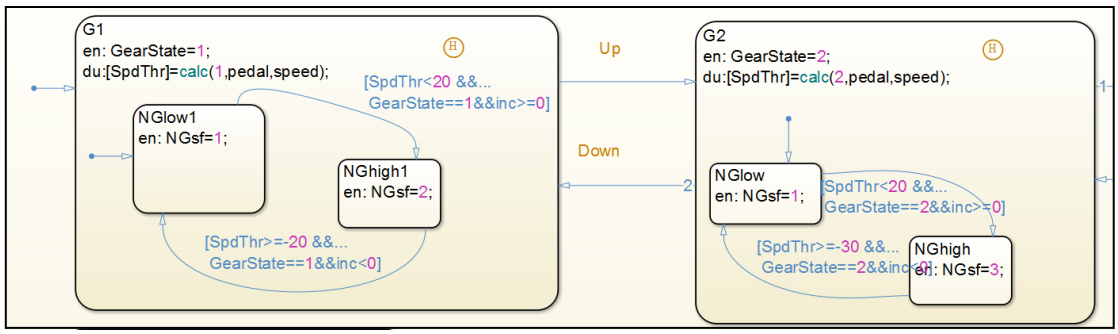

Figure 38: gear control in Simulink

b) Pre-synchroniser selection

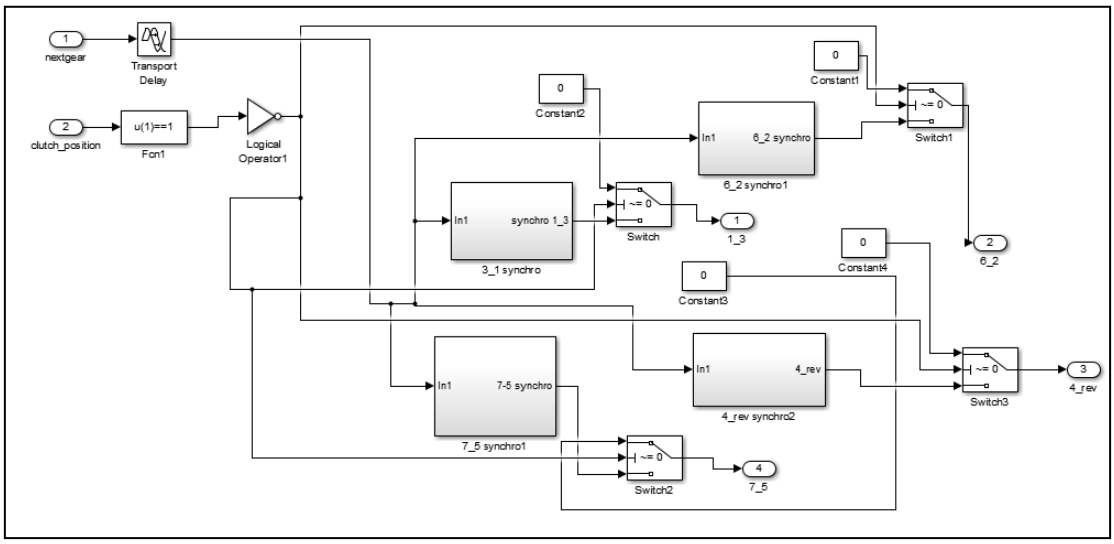

Figure 39: pre-selection of Synchroniser actuation

c) Synchroniser selection

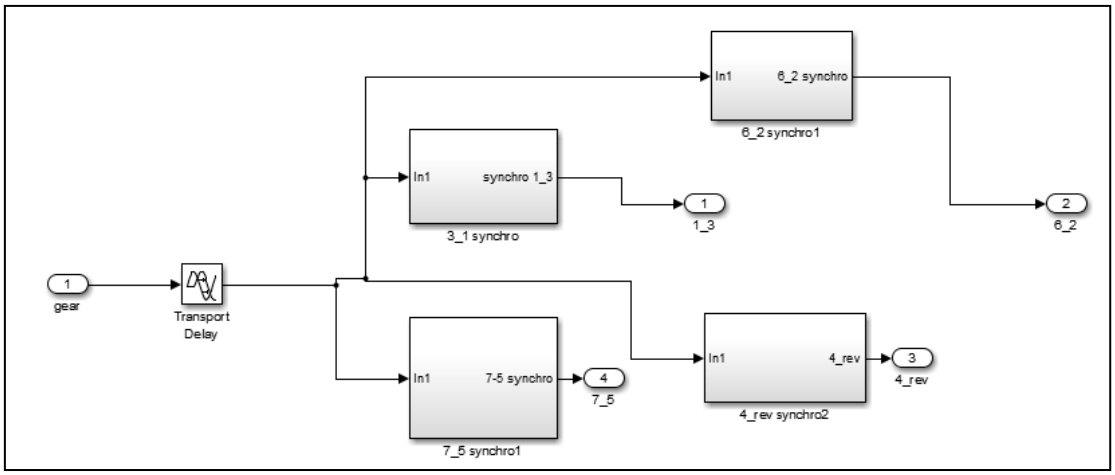

Figure 40: Synchroniser actuation