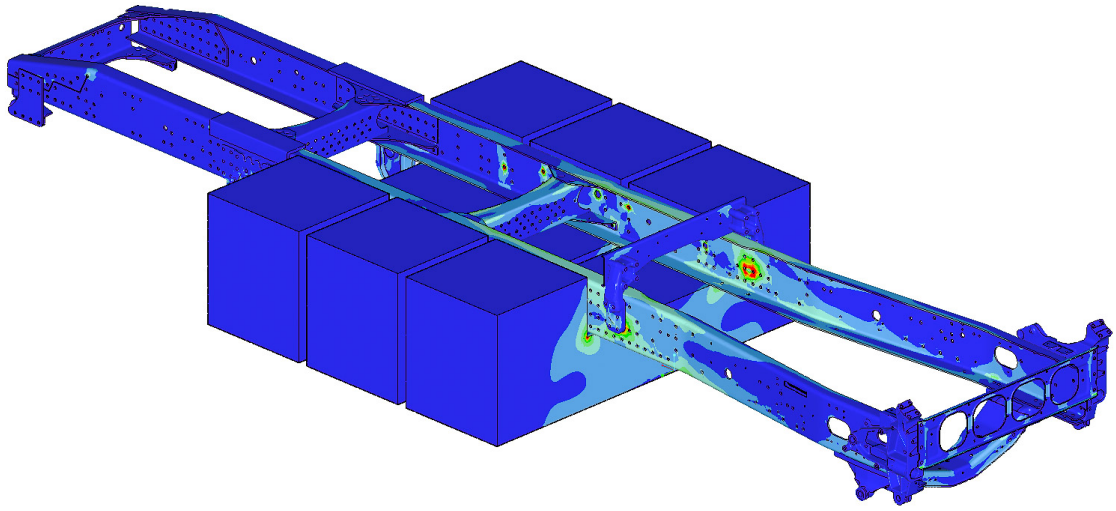
CHALMERS
UNIVERSITY OF TECHNOLOGY



Packaging concepts of an energy storage system for a fully electric heavy duty truck

A literature review of battery energy storage technology and a concept generation based on finite element modelling and design optimization concepts

Thesis for the Degree of Master of Science

FILIP JÖNSSON
JOHAN KINDAHL

Department of Industrial and Materials Science
CHALMERS UNIVERSITY OF TECHNOLOGY
Gothenburg, Sweden 2018

Master's thesis 2018

Packaging concepts of an energy storage system for a fully electric heavy duty truck

A literature review of battery energy storage technology and a concept generation based on finite element modelling and design optimization concepts

FILIP JÖNSSON
JOHAN KINDAHL



CHALMERS
UNIVERSITY OF TECHNOLOGY

Department of Industrial and Materials Science
Product Development
Chalmers University of Technology
Gothenburg, Sweden 2018

Packaging concepts of an energy storage system for a fully electric heavy duty truck
A literature review of battery energy storage technology and a concept generation based on finite element modelling and design optimization concepts
FILIP JÖNSSON, JOHAN KINDAHL

© FILIP JÖNSSON. JOHAN KINDAHL, 2018.

Company Supervisor: Sondre Landvik, Volvo Group Trucks Technology
Company Supervisor: Sebastien Ragot, Volvo Group Trucks Technology
Examiner: Andreas Dagman, Department of Industrial and Materials Science

Master's Thesis 2018
Department of Industrial and Materials Science
Division of Product development
Chalmers University of Technology
SE-412 96 Gothenburg
Telephone +46 31 772 1000

Cover: Print screen from Creo Simulate

Typeset in LaTeX
Printed by Chalmers Reproservice
Gothenburg, Sweden 2018

Packaging concepts of an energy storage system for a fully electric heavy duty truck
A literature review of battery energy storage technology and a concept generation based on finite element modelling and design optimization concepts
FILIP JÖNSSON
JOHAN KINDAHL
Department of Industrial and Materials Science
Chalmers University of Technology

Abstract

The implementation of battery powered electric trucks in the commercial vehicle market means the introduction of heavy and bulky battery storage solutions. The purpose of this thesis is to do a review of electric vehicle battery technology and use it as a foundation to create energy storage (ESS) packaging concepts for a fully electric heavy duty truck. This is done with the prerequisites that the current Volvo truck chassis is to be used, along with Li-ion battery technology.

The entire project was based on the generic development process, with a focus on the initial steps where the project planning and concept development is performed. The battery technology review was conducted as a literature review where the basics of Li-ion batteries and electric vehicle technology was investigated. The lessons learned from this review were then carried over into the concept development phase. A large portion of the concept development phase was then in turn attributed to the evaluation of high level packaging concepts using finite element analysis. Following this was a process of creating a design optimization method that could further evaluate and help select promising packaging concepts in a more easy and definitive way.

The results of the literature review showed that Li-ion batteries are the dominant technology within vehicle electrification. There are however some safety concerns regarding the battery technology that has to be further investigated in order for it to be viable long term. The finite element analysis showed that there are many variables and multiple objectives that needs to be taken into account when designing ESS packaging concepts. Thus, in order to evaluate ESS packaging solutions, design optimization has to be implemented as it enables different to be evaluated in an automated way.

Design optimization is the way forward when developing ESS packaging solutions. However, it requires some skill and time to set up a design optimization study, and the results needs to be interpreted. Further research should test and implement the method created in this thesis in order to evaluate packaging concepts.

Keywords: product development, energy storage system (ESS), battery technology, fully electric heavy duty truck, electromobility, finite element analysis, design optimization method, modeFRONTIER.

Acknowledgements

This thesis project was carried out during the spring term of 2018 at Volvo Trucks in Gothenburg as a part of the masters program Product Development at Chalmers University of Technology.

First of all we would like to thank our great supervisors at Volvo Trucks, Sondre Landvik and Sebastien Ragot. They have been very generous with allocating their time and attention to this thesis project, as well as offering their constructive thoughts and continuous support. We would also like to thank our supervisor at the department of industrial and materials science at Chalmers University of Technology, Andreas Dagman for his input and direction.

Furthermore, we would like to thank the entire CSETA group at Volvo Trucks for their help and encouragement throughout this whole project. Last but not least, would like to thank everyone else at Volvo that has taken the time to contribute with their opinions and knowledge to this project. We would especially like to direct a thank you towards Jonas Sjögren for his helpful advise regarding optimization.

Filip Jönsson and Johan Kindahl, Gothenburg, June 2018

Contents

List of Figures **xiii**

Acronyms **xvii**

1 Introduction **1**
1.1 Background . . . 1
1.2 Volvo Group . . . 2
1.2.1 Volvo Trucks . . . 3
1.2.2 Volvo Group Trucks Technology . . . 4
1.3 Purpose . . . 4
1.4 Objectives . . . 4
1.5 Delimitaions . . . 5
1.6 Limitations . . . 5

2 Theory and Literature Review **7**
2.1 The Product Development Process . . . 7
2.1.1 Concept development . . . 8
2.1.1.1 Identifying customer needs . . . 8
2.1.1.2 Create product specification . . . 8
2.1.1.3 Concept generation . . . 8
2.1.1.4 Concept selection . . . 10
2.1.2 S-curves of Innovation . . . 11
2.1.3 The Design Paradox . . . 12
2.1.4 Finite Element Analysis . . . 12
2.1.5 Optimization . . . 13
2.2 Electric Vehicle Technology . . . 14
2.2.1 High Voltage Traction System . . . 15
2.2.2 Energy Storage System . . . 16
2.2.2.1 Battery Management System . . . 17
2.2.2.2 Cooling system for ESS . . . 17
2.2.3 Electric Machines . . . 18
2.2.4 Power Electronics . . . 18
2.3 Battery Technology . . . 19
2.3.1 Battery Parameters . . . 19
2.3.2 Li-ion Batteries . . . 22
2.3.2.1 The merits of Li-ion batteries . . . 22

2.3.2.2 Basic Principles and Architecture 24
2.3.3 Dangers and Failure Modes 26
2.3.3.1 Thermal Runaway 26
2.3.3.2 Reducing the Hazard in case of thermal runaway . . 30
2.3.4 Suppliers of Batteries 30
2.3.5 Future Battery Technology 31
2.4 Heavy Duty Truck Technology 32
2.4.1 Vehicle architecture 33
2.4.2 Vehicle dynamics 35
2.4.2.1 Strength and stiffness 36
2.4.2.2 Excitation and natural frequencies 38
2.4.2.3 A vehicle dynamic multi-objective optimization . . . 39
2.4.3 Collision safety 39
2.4.3.1 Energy Absorption Theory 40
2.5 Mechanical aspects of ESS-Pack design 41

3 Methodology **45**
3.1 The Product Development Process 45
3.2 Literature review 45
3.3 Research and Analysis 46
3.3.1 S-curve and The Design Paradox 46
3.3.2 Competition Benchmarking 47
3.3.3 List of requirements 47
3.4 Concept development 48
3.4.1 Function Analysis 48
3.4.2 Concretization of Designspace 48
3.4.3 Phase one 49
3.4.4 Phase two 52
3.5 Multi-objective Optimization 52

4 Research and Analysis **55**
4.1 Project Maturity 55
4.2 Competitor benchmark 55
4.2.1 Mercedes-Benz eActros 56
4.2.2 Tesla Semi 57
4.3 Development of list of requirements 58
4.3.1 Mechanical safety 60
4.3.2 Electrical safety 61
4.3.3 Thermal safety 61
4.3.4 Architectural and Packaging Requirements 62
4.3.5 Environmental working conditions 63
4.3.6 Maintenance and serviceability 63
4.3.7 Manufacturing and assembly 64
4.3.8 List of requirements 65

5 Concept development **67**
5.1 Functional Analysis 67

5.2 Concretization of designspace 68
5.3 Phase one: Initial modelling of four concepts 69
5.3.1 Concept generation 69
5.3.2 Concept evaluation 70
5.4 Phase Two: Further modelling of two representative concepts 72
5.4.1 Bigone 73
5.4.2 Parallel 2-piece 74
5.4.3 Results 76

6 Design optimization **77**
6.1 Initial problem statement 77
6.2 Development of optimization model 78
6.2.1 Coupling of variables 80
6.3 Interpretation of optimization results and further develop an optimization model 81
6.3.1 Correlation analysis 81
6.3.2 Scatter chart and Pareto front 83
6.3.3 Parallel coordinate analysis 85
6.4 Summary of optimization and recommendation for further work . . . 86

7 Discussion **87**

8 Conclusion **89**

9 Future recommendations **91**

Bibliography **93**

A Appendix: List of requirements **I**

B Appendix: Simulation Results Phase One **V**

List of Figures

1.1 Figure describing the circulatory "what we do - system" of Volvo Group 2
1.2 The Volvo brand portfolio 3
1.3 A Volvo FH16 4x2 tractor with trailer 4

2.1 The generic product development process 7
2.2 Concept evaluation and selection process 11
2.3 An S-curve showing the performance development of copier machine technology 12
2.4 Graphical representation of the so called design paradox 12
2.5 Processes in a FE-analysis and an optimization study 13
2.6 An example of a convex Pareto front 14
2.7 A Pareto front with a knee-point and weighted objectives 14
2.8 Description of most important component for a HVTS 15
2.9 Hierarchic description of ESS-pack 17
2.10 A comparison between the volumetric energy density of different fuel storing options 20
2.11 Specific power and specific energy density of different battery types . 20
2.12 Figure displaying the safety margins in the prediction of SoC 21
2.13 Price of Li-ion batteries in $/kWh 23
2.14 Gravimetric energy density of different Li-ion batteries 24
2.15 Pouch battery 26
2.16 Prismatic battery 26
2.17 Cylindrical battery 26
2.18 Li-ion battery failures correlated to abuse conditions 27
2.19 Severity level of internal short circuit of Li-ion batteries 28
2.20 Isometric view of the single specified vehicle 33
2.21 Stripped version of the SSV 34
2.22 A fuel tank with mounting 34
2.23 View from below SSV 35
2.24 Additional frame mounted on main frame 37
2.25 A tipper 37
2.26 Flexible attachments 37
2.27 Stiff attachment 37
2.28 Volvo truck side underrun protection 40
2.29 Frontal collision cross beam and a crush-box 41
2.30 Side impact protection beams 41

2.31 Internal structure of a generic ESS-pack 42
2.32 ESS-pack housing and structural reinforcement by cooling plates . . . 42
2.33 ESS-pack whith thermal barrier 43
2.34 Cylindrical battery cells assembled with cell spacers 43

3.1 Chassis with applied torsion load case 50
3.2 Chassis with applied torsion load case 51
3.3 Spring attachment between frame and ESS-pack 51
3.4 Attachment between frames and ESS-packs for the four concepts . . . 52

4.1 Mercedes-Benz eActros 56
4.2 Mercedes-Benz eActros 57
4.3 Tesla Semi 58
4.4 Conceptual explanation of internal and external requirements 59

5.1 Functionanalysis of ESS-pack 67
5.2 Initial division of designspaces 68
5.3 Geometrical division of design space, Concepts from left: Bigone, Parallel 3-piece, Perpendicular and Parallel 2-piece 69
5.4 Von mises stress plot for chassis exposed to torsional load [Mpa] . . . 70
5.5 Von-Mises stress plot for concept Bigone exposed to torsional load . . 71
5.6 Von-Mises stress plot for cross member in the empty chassis (to the left) in the concept Bigone (to the right)[Mpa] 71
5.7 Von-mises stress plot for concept parallel two piece exposed to torsional load [mPa] 72
5.8 Cross section of the concept Parallel 2-piece 72
5.9 Four-point and three-point suspension for concept Bigone 73
5.10 Stress plots for three-point (left in fig) and four-point suspension (right in fig) for concept Bigone exposed to torsion load case 74
5.11 Stress plots for three-point (left in fig) and four-point suspension (right in fig) for concept Bigone, exposed to the torsion load case . . 74
5.12 von-Mises and displacement plot for coupled and uncoupled packs exposed for 1 g Gravitational load. 75
5.13 von-Mises and displacement plot for coupled and uncoupled packs exposed for 1 g Gravitational load. 75

6.1 ESS-pack model used in optimization, iso-view 79
6.2 ESS-pack model used in optimization, top-view 79
6.3 The process for a topology optimization 80
6.4 Model setup for initial optimization 81
6.5 Scatter matrix analysis in modeFRONTIER 82
6.6 Sensitivity analysis for the objective max eigenvalue 82
6.7 Result of sensitivity analysis 83
6.8 Scatter chart for objectives min stress and max natural frequency . . 84
6.9 Scatter chart for objectives max natural frequency and min torque . . 84
6.10 Scatter chart for objectives minimizing torque and min stress 84
6.11 Scatter 3D chart 84

6.12 Parallel coordinates analysis in modeFRONTIER 85
6.13 Scatter matrix analysis in modeFRONTIER 86

B.1 Von-Mises stress plot for chassis and 4 concepts exposed to torsional load, Top-view [Mpa] VI
B.2 Von-Mises stress plot for chassis and 4 concepts exposed to torsional load, Iso-view [Mpa] VII
B.3 Von-Mises stress plot for chassis and 4 concepts exposed to torsional load, Top-view [Mpa] VIII
B.4 Von-Mises stress plot - stress levels in ESS packs for four concepts exposed to torsional load[Mpa] IX

Acronyms

The table below contains the acronyms that are used throughout this report in the order that they appear.

Acronym	**Expansion**
SSV	Single specified vehicle
ESS	Energy storage system
HDV	Heavy duty vehicle
FEA	Finite element analysis
MOO	Multi objective optimization
ICEV	Internal combustion engine vehicles
TR	Thermal runaway
BEV	Battery electric vehicles
BMS	Battery management system
SoC	State of charge
DoD	Depth of discharge
NMH	Thermal runaway
NMH	Nickel-metal hydride
ISC	Internal short circuit
ESC	External short circuit
PSD	Power spectral density
EMC	Electromagnetic compatibility

1
Introduction

Today as well as in the future, society must be more considerate of the environment in every aspect of life. This is true for all people and industries, but it is especially true for the transport industry. Commercial vehicles such as trucks contribute to a significant part of world wide pollution through their exhaust emissions, a fact that has lead to the implementation of stricter legislation for these vehicles in recent years. There is thus a need for companies such as Volvo Trucks to investigate other means of propulsion than the internal combustion engine, which is the dominant solution of today in most trucks.

One solution to this problem would be the introduction of electric powertrains in the truck industry. Fully electric trucks are under development and are now being introduced for local and city distribution. There is however, up until now, less being done for heavy duty and long haul trucks. One of the reasons for this is that heavy duty trucks have the potential to carry more and heavier cargo, often for longer distances than trucks developed for local and city distribution. These characteristics require more powerful engines, which in turn utilizes more fuel. Today, heavy duty trucks are designed to have a type of fuel that have a so called high energy density, meaning that it can give a high energy output in relation to the weight of the fuel itself. This poses a problem for electrical energy storage systems such as batteries which, compare to more conventional liquid fuels such as diesel, have a relatively low energy density. Thus, if batteries are to be the power source for heavy duty trucks, new packaging solutions are necessary. With the technology of today, batteries are both heavier and take up more space than conventional liquid energy storage systems. This if they are compared with each other with regards to energy per kg of weight and energy per unit of space.
This thesis is conducted in collaboration with Volvo Group Trucks Technology. The following sections presents the prerequisites of the project, focusing on what is included within its scope, purpose and deliverables.

1.1 Background

The problems of the commercial vehicle industry highlighted above have affected all major companies within it. Most manufacturers look towards new solutions in order to stay competitive. Volvo Group is one of the leading companies within this global commercial vehicle market. Under the umbrella of Volvo Group there are several companies, two of which are Volvo Trucks and Volvo Buses. Volvo Buses has had experience with introducing electric powertrains into their products, both in

the form of so called electric hybrids (vehicles with electric motors and an internal combustion engine) and fully electric vehicles. These types of vehicles utilizes an energy storage system (ESS) in the form of batteries that are packed and bundled together. Volvo trucks have however, at the moment, no commercially available truck models utilizing electric powertrains. If there is to be a heavy duty electric truck in the future within the Volvo Trucks product portfolio, the issue of how to design and package ESS's for trucks have to be solved. This means tackling the many problems with implementing a large and heavy component on a truck that has changed very little architecturally over the last decades. There are issues to solve within electrical, chemical and mechanical engineering, with so many of the fields being coupled and dependent upon each other. That is why it is necessary to start development right away, before one is left behind by the competition.

1.2 Volvo Group

Volvo Group is a global company with its head office in Gothenburg, Sweden. It employs nearly 100 000 people, distributed over 18 countries and have products available in 190 markets all over the world. The company is an industry leader within several markets, having products included in the following segments; trucks, buses, construction equipment and marine and industrial engines. These different product areas are represented in fig. 1.1, accompanied with their respective product objectives.



Figure 1.1: Figure describing the circulatory "what we do - system" of Volvo Group [1]

The Volvo Group brand portfolio also includes several known brands such as: Mack Trucks, Renault Trucks, Novabus and UD trucks. These brands diversify the Volvo product offering, making it possible to cover many different kinds of markets. This means that products are able to be customized for these markets, and the specific requirements of their respective customers. A complete overview of the different companies included within the Volvo Group umbrella can be seen in fig. 1.2.



Figure 1.2: The Volvo brand portfolio [1]

1.2.1 Volvo Trucks

Volvo Trucks is a brand within the Volvo Group which offers products in the medium and heavy duty truck market segments. Volvo Trucks is focused on the premium products, primarily in Europe and North America, but also in other places such as India. The large majority of trucks sold by the company weighs in at over 16 tonnes, meaning that a plurality of its revenue comes from the heavy duty truck market segment. Volvo Trucks are, according to the company, centered around values such as quality, safety and being environmentally sustainable. The company emphasizes with regards to safety that, since 1969 it has had a so called "Accident Research Team", investigating real world accidents involving Volvo Trucks. Considering being environmentally sustainable the company remarks that, as early as in the 1970s, Volvo Trucks introduced the concept of considering the environment when designing their products as a core company value.

One of the most successful products within the Volvo Trucks range is the 4x2 heavy duty tractor, an example of which can be seen in fig. 1.3. This vehicle accounts for a significant part of the vehicles sold by the company, and is therefore a good representation of the company itself. This is why, for this project, a so called single specified vehicle (or SSV) 4x2 tractor has been selected as a basis for development. That a vehicle is a SSV means that is has been produced by Volvo, with a specific single specification. The reason for selecting a SSV is since Volvo Trucks has very modular products, meaning that almost every truck is unique. It is therefore easier to select a pre-defined truck as a basis for a project, rather than trying to adapt the developed concepts to all possible variations of a truck.



Figure 1.3: A Volvo FH16 4x2 tractor with trailer [2]

1.2.2 Volvo Group Trucks Technology

Volvo Group Trucks Technology (Volvo GTT) is the R&D and product development branch of Volvo Group and is responsible for all of Volvo Group's brands. The solutions developed by Volvo GTT with regards to power trains, complete vehicle, components and service trickle down into Volvo Trucks, Renault Trucks, Mack and UD Trucks. It is also the branch within which this thesis is being conducted. The specific unit within Volvo GTT that supervises this project is the unit responsible for designing chassis mounting solutions for components such as the low voltage battery box, exhaust treatment systems, the diesel storage and several other components.

Since this project is being conducted in collaboration with Volvo GTT, the reader should be aware of that from this point on in the report, when only "Volvo" is mentioned, the authors are referring to Volvo Trucks.

1.3 Purpose

The purpose of this thesis is to explore and determine which requirements are necessary to employ when designing the mechanical parts of the suspension and containment solutions for a battery energy storage system for a fully electric heavy duty truck. The project furthermore encompasses the development of concepts related to implementing this technology on a heavy duty truck.

1.4 Objectives

The objective of this project is to develop packaging concepts of an electric energy storage system (ESS) for a fully electric heavy duty truck. The expected outcome

includes the following:

- A thorough battery technology investigation to guide further development in the field of ESS design.
- A list of requirements for an ESS implemented on a truck.
- Technology readiness level 3 (TRL3) packaging concepts to guide future development and implementation of ESS components in truck applications.
- An optimization method that can be used to evaluate ESS packaging concepts

1.5 Delimitaions

The SSV described earlier is a truck model that is currently available for customers. The concept development will be based on the architecture of the SSV, as well as its intended area of application and customer base. In other words, the following is defined:

- The truck is a four wheeled tractor with two driven wheels
- The general dimensions and weight of the truck and its components are the same as the SSV.

The concepts will be developed in order to investigate how a fully electric heavy duty truck could be designed in the near future. The evolution of batteries is thereby limited to what is predicted in five years time. Therefore, Lithium ion batteries will be considered as the state of the art battery technology for this application. Another limitation is that the project will assume that the electric machines will be mounted on the rear axle of the vehicle. This means that the area at the rear of the vehicle will not be included within the design space of the project. Furthermore, the batteries will be handled as black boxes. The internal design of a battery will not be considered.

1.6 Limitations

This project is being conducted without the help or support of the electromobility department at Volvo GTT. This means that not all knowledge regarding electrification of vehicles at Volvo GTT can be incorporated into the project. The writers of this thesis must therefore make some assumptions related to electromobility when conducting the project.

Also since the technology surrounding battery packs in electric vehicle applications is at a very early stage of development, most of the specifics regarding existing battery packs is not easily available. This means that the manufacturers producing these battery pack solutions are very secretive when it comes to their products. With this in mind, some assumptions regarding the battery packs have to be made when necessary.

2

Theory and Literature Review

This chapter summarizes some of the knowledge necessary to have in order to understand the technology behind, challenges with and prospects of fully electric heavy duty trucks. The chapter is done as a literature review that is part of the objective to provide a battery technology investigation, presented in section 1.4. It also aims at providing sufficient background knowledge for the methods that are used in this thesis.

2.1 The Product Development Process

In order to be competitive in a global market that is constantly evolving at a high rate it is of highest importance to implement concept development in a structured way. The success of a product depends on its ability to meet the needs of the customers. In an efficient product development process the needs of the customer is identified and a product is designed and produced so that it can meet these needs at a low cost[3]. This process is cross functional and covers all aspects of a product life cycle. Ulrich and Eppinger presents a set of product development methods that are designed to include marketing, design and manufacturing aspects and more.

According to Ulrich and Eppinger the product development process can be divided into six phases which are presented in fig. 2.1. The six phases covers the essential processes that are needed to follow in order to go from an idea to a product and describes the concept development phase in depth.

As alluded to in the figure text of fig. 2.1, the process that is displayed is generic. If this fact is ignored it easy to assumed that certain tools used in the product development process are allocated to certain parts of the process exclusively. This is not always the case. Some tools and methods, such as finite element modelling and optimization, that is traditionally used at the detail design stage of the product development process can be utilized at a very early stage. This is especially the case if the project is very exploratory in nature, meaning for example that novel technology is implemented in a new way. Thus, it is always important to keep in mind that the product development process always has to be adapted to the application in question.



Figure 2.1: The generic product development process [3]

2.1.1 Concept development

The concept development phase is the phase within the product development process pictured above which will be covered in this thesis. The concept development phase includes the activities; identifying customer needs, creating a product specification, creating and evaluating concepts. These will be presented in the following sections.

2.1.1.1 Identifying customer needs

To be able to develop a successful product it is important to understand the needs of the customer. Ulrich and Eppinger state the importance of identifying both latent and explicit needs in order to make the product focused on customer needs. The customer needs are fundamental to capture in order to allow a common understanding of the product among the members of any development team, as well as to form the basis for the product specification. This to guide further concept generation and evaluation. The process includes the steps; gather raw data from customers, interpret the raw data in terms of customer needs, organize the needs into a hierarchy and establish the relative importance of the needs.

2.1.1.2 Create product specification

Customer needs are most often expressed in the language of the customer. These formulations may be vague and leave margin for subjective interpretation. In order to distinctly guide concept development and evaluation, a product specification is created. A product specification aims to precisely describe what the product has to do. It is a list of requirements consisting of a metric and a value. A requirement must be unambiguous and measurable. Requirements can originate from different stakeholders and from different domains and are divided into; user requirements, requirements from stakeholders, legal requirements and internal requirements from the company.

Since knowledge is built up during a project the product specification will evolve constantly. Specifications are established at least two times, once after identifying the customer needs and once at the end of the concept generation. After identifying customer needs, a target specification is established which represents the hopes and ambitions of the development team. During the project, new technology and previously unknown facts about the chosen concepts will constrain what can be achieved and the requirements have to be revised. The developed concepts might fail to meet some requirement and exceed other requirements. To establish the final specification trade-offs must be be made between different desirable characteristics. During the last stage of the concept generation, final specifications are established in order to guide further development of the product.

2.1.1.3 Concept generation

A concept is a description of; the technology, the working principles and the design of a product. It aims to answer the question of: "how to meet the customer demands". The concept generation process starts with customer needs and target specifications, and results in a number of concepts among which one is chosen to be the most

suitable one. Trough structured methods and a wide range of activities it is ensured that the full space of solutions are explored. Although concept generation is a creative process the result can be enhanced by using more structured methods. The concept generation process can, according to Ulrich and Eppinger be divided into five steps.

The *first* step is to clarify the problem. By decomposing the problem into simpler sub-problems, a deeper understanding of the product can be gained. It is also worth noting that more complex problems can be impossible to solve straight away, meaning that decomposition into sub-problems may be required to solve it. The decomposition can be done in many ways and with different aspects in focus. A decomposition can focus on functions, flows of material, flows of signals and can be done i steps to increase the level of detail. The first decomposition is often a black box model where the product is represented as a black box into which materials, energy and signals enters and exits. After a black box is generated, the detail level can be increased and the product is divided into and described by a set of sub-functions. This means creating what is called a functional analysis. In a functional analysis each sub-function must be described without indicating a working principle in order to enable full space of available solutions. A sub-function can be divided into several sub-functions to further describe the product.

During the process of creating a functional analysis, many teams create several drafts and iterate the process until all members of the team agrees upon the structure and the functions that are included within it. A product can also be decomposed by user actions or customer needs in order to focus on other values. Ulrich and Eppinger proposes that, when a team agrees upon a functional analysis, critical sub-problems can be identified and the sub-problem that is most critical to the success of the product can have the initial focus of the team. An analysis of coupled functions must also be performed. This in order to understand the relations between different functions[4].

Step *two* is to search externally for solutions to the problem and the defined sub-problems. Using existing solutions alone seldom results in a successfully product, but the use of existing solutions permits the team to focus on the critical sub-problem where there is no existing solution. Combining existing solutions and new solutions to sub-functions can often result in a product with a superior main function. Examples of sources to external solutions are; lead user interviews, competitive benchmarking, patent searches, expert consultation and literature searches.

The *third* step is to search internally and create solutions to sub-problems. In this step, the inherent creativity and knowledge of the team is used to create concepts. This can be done individually or in a group. In order to retrieve all potential useful ideas, this phase must be able to be adapted to each project in order to facilitate creativity. According to Ulrich and Eppinger the following four guidelines are useful for improving the process in this phase:

Suspend judgment

The team must agree to not make judgments about an idea until relevant information about it is available. In this phase it is is good to ban any criticism of a concept and instead encourage the team members to ask questions to further de-

velop a thought which will result in an improved idea or alternative ideas.

Generate lots of ideas
Research shows that it is more likely that the full solution space is explored if lots of ideas are generated. An idea can act as stimulus and result in new ideas.

Welcome ideas that seem infeasible
Without ideas that in the first place seem infeasible, no boundaries are pushed and the potential of them will be limited even at an early stage. Infeasible ideas pushes the limits of what is possible and encourages the team to think in new ways.

Use graphical and physical media
Developing and analyzing products using reasoning only is difficult. Therefore graphical presentations and simple prototypes can be very helpful in the process of developing an idea.

The *fourth* step is to explore systematically. The previous steps have hopefully resulted in a great amount of solutions to the sub-problems. By using for example a concept classification tree, the sub-solutions can be categorized into distinct classes. This in order to further develop each class of solutions. Also, by using a concept combination table, sub-solutions can be merged to one concept capable of solving all sub-problems. This enables exploration of the full space of solutions.

The *fifth* step is to reflect over the process and the generated solutions. Even though this step is placed at the end, reflection of the process should be done continuously throughout the concept generation process in order ensure the the quality of its results.

2.1.1.4 Concept selection

When concepts have been generated, the process of evaluating and selecting one or more concepts for further development starts. There are many ways to evaluate concepts, ranging from intuitive approaches to structured methods. Ulrich and Eppinger proposes a two step process consisting of; concept screening and concept scoring. This reduces the possible number of concepts until the most promising one is selected. This process is visualized in fig. 2.2. Wheelwright and Clark [5] describe the process in a similar manner. The process of screening and evaluating process can be described as a funnel where three screens filter out the less promising ideas and the selected concepts exit the funnel. The method of screening and selecting concepts must be chosen according to the characteristics of the project.

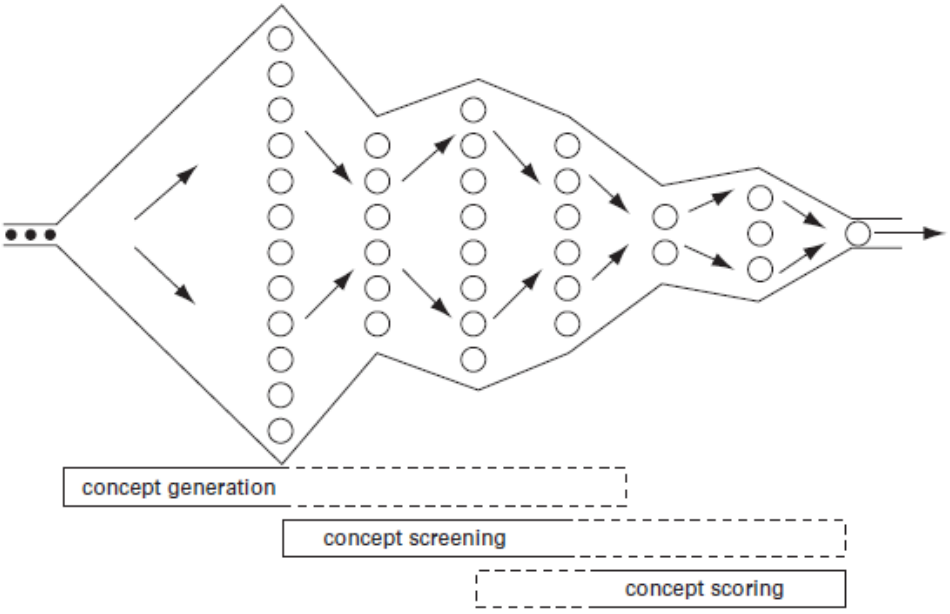


Figure 2.2: Concept evaluation and selection process [3]

There are several other means of evaluation and screening. External decision makers, an influential member of the team or a web-based survey can form the basis for an evaluation or selection. A pros and cons list can also be used for the same purpose, based upon the opinion of a single member or the whole group. Prototypes can be built to create an evaluation based on test data. Finally, there are decision matrices with pre-specified evaluation criteria which can be helpful under certain circumstances.

2.1.2 S-curves of Innovation

A concept within product planning that greatly influences product development, is S-curves. An S-curve is a graphical way of illustrating how the performance of a specific product evolves with respect to time. The performance is usually a single measurable metric, for example volume capacity in GB when talking about external computer hard drives. As it turns out, most product industries follow a similar pattern when it comes to performance development. This pattern can be represented by drawing an S in a performance-time graph, as can be seen in fig. 2.3. At the beginning of a product's life, development is rather slow and flat. What follows after that is a period of rapid development and exponential growth in performance. Finally, at the end of a product's life, the growth slows down again and finally stops all together. This is usually followed by a new technology being introduced, and thus a new S-curve is started. The reasons for this behaviour of performance growth are many. It has to do with everything from increased technology development to financial investments and customer demand [3][5] .

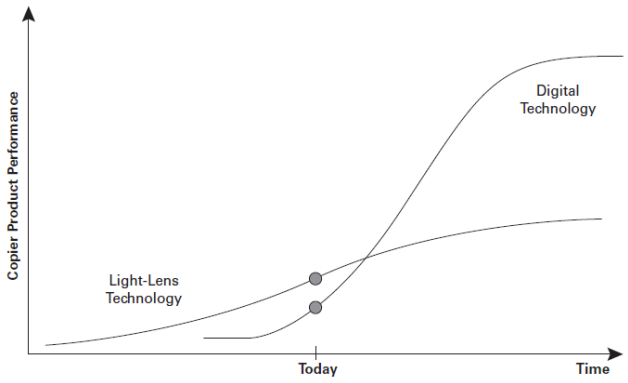


Figure 2.3: An S-curve showing the performance development of copier machine technology [3]

2.1.3 The Design Paradox

Another factor that is present in all product development processes is that less is known about the problem at the beginning than at the end of a project. At the same time, there is less design freedom at the end than at the beginning. This leads to what is called the design paradox, a graphic representation of which can be seen in fig. 2.4. The design paradox describes the issue of combining the two facts about design freedom and knowledge of the problem above. There is a period at the beginning of any development process where changes can be made very easily, but it is hard to know what these changes are. However, the further the process progresses, the less easily the accumulated knowledge can be used, i.e. changes are more difficult when you know what have to be changed [5].

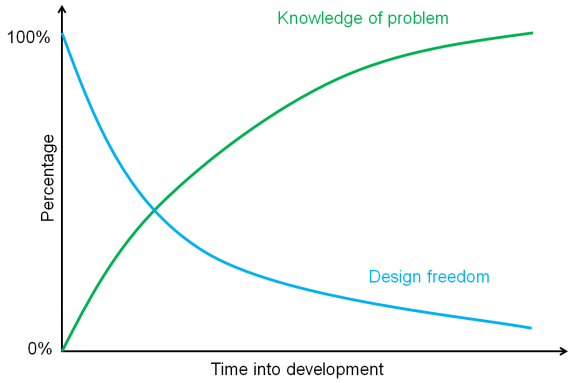


Figure 2.4: Graphical representation of the so called design paradox

2.1.4 Finite Element Analysis

The design of any product or component must be evaluated during concept generation. At an early stage it might be possible to simplify load cases and geometries to elemental load cases in order to roughly evaluate a concept. For a more developed concept, prototypes can be built and tested to evaluate design parameters, but this process is a slow and costly. Finite element analysis (FEA) is a less expensive and

more effective way of evaluating designs during all phases of product development [6]. According to Eckard [6], FEA gives new possibilities and ads value when designs can be studied in detail at an early stage of development. Thus changes can be made to the designs when the cost is lower. He also states that the possibility to analyze a large number of iterations of a component will increase the overall understanding of it. This in addition to having the benefit of enabling the analysis of a product's mechanical performance.

2.1.5 Optimization

Optimization is a mathematical method used to find an optimal solution to a problem[7]. By using input variables covering a defined design space an optimal solution can be found.[8].

Optimization can be used in conjunction with FEA or other types of simulation methods. In FEA, a finite element model is used to calculate some kind of result. In an optimization study an optimization software can be used used to automate the calculation process, performing multiple FE-analyses in succession and changing the input variables between each iteration. The results are then evaluated in a post processor and can then be utilized to find an optimal solution. These processes are shown graphically in fig. 2.5

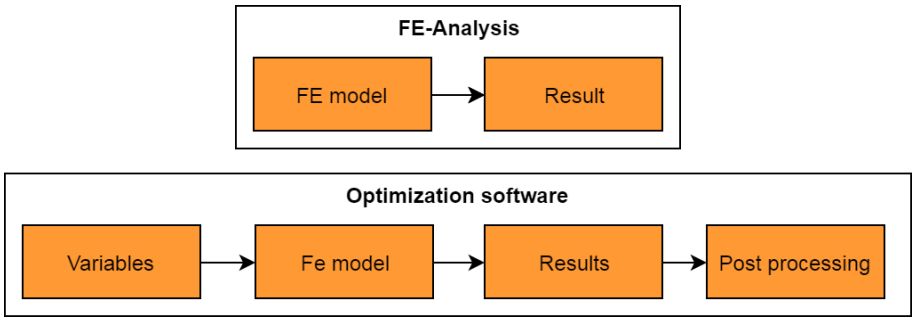


Figure 2.5: Processes in a FE-analysis and an optimization study

The critical question for optimal design is how to measure what is "a good design". In order to evaluate and find the "best" design, some criterion's must be defined. By using minimization or maximization functions as objectives, for example the minimum weight or the maximum strength of a design can be found. In product development, conflicting objectives are often present. Maximizing strength and minimizing weight is a common example of conflicting objectives, i.e. if a design is decreased in weight, it naturally looses strength. Having more than one objective increases the complexity of the problem. In multi-objective optimization (MOO), no single solution exist that optimizes all objectives but rather a number of optimal solutions[8]. Fig 2.6 shows a MOO with the objectives C1 and C2. The grey area represent all different possible solutions as defined by the designspace. The black line in the figure represent a Pareto set, containing optimal solutions. A solution is Pareto optimal if no objective can be improved without degrading another. All solutions in the Pareto set is objectively equally good, meaning that it is necessary

to use some kind of method of discrimination to distinguish them. This method can for example be subjective preferences or weighting the importance of the objectives.

In 2.7 a Pareto front with a so called knee point is presented. A knee emerges in a situation where one objective can not be improved without degrading the another objective to a much greater extent. A line, W, which represent a weighting between the objectives c1 and c2 can be seen in the figure. The angle of the line represent the weighting between the two objectives. The optimal solution is found by moving the line in the normal direction. The optimal solution is found where the line coincidence with a solution. If a knee point is present it often comes out to be the optimal solution.

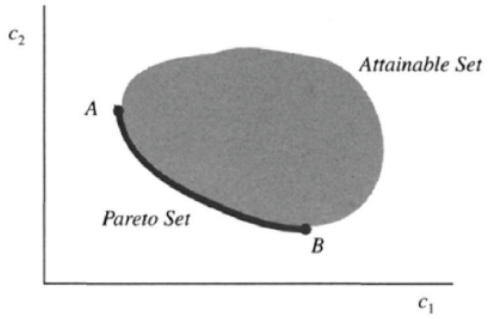


Figure 2.6: An example of a convex Pareto front

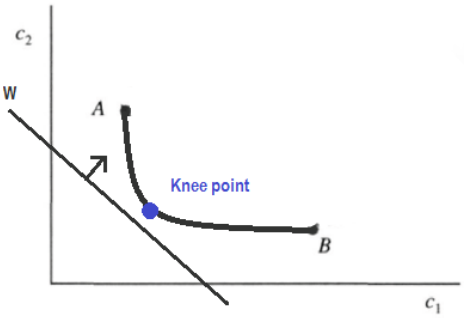


Figure 2.7: A Pareto front with a knee-point and weighted objectives

Product development can be improved by computer aided modelling, simulation and optimization techniques[7]. At an early stage in a project, where the freedom of design is still high and the knowledge of the problem is low, optimization have great potential to increase the knowledge about a problem. Before any concepts are generated, different designs can be evaluated by changing the parameters of the design. Changing design parameters enhances the knowledge about what is adding value to a concept. In the product development process described by Ulrich and Eppinger and Wheelwright and Clark [5], CAE is often introduced later on in a project, in the detail design phase. The downside with a late implementation of FE-simulations an optimization is that concepts and designs may already be developed, evaluated and chosen and the optimization will only be used to improve a sub-optimal concept. This as opposed to optimization being the tool to help finding the optimal concept at an early stage, and basing all subsequent work on that concept. If optimization is used properly, cost and design cycle time can be reduced which increases the chances of the project of being successful[7][5].

2.2 Electric Vehicle Technology

Reducing greenhouse gas emissions that contribute to global climate change is seen as a very important subject in today's society. This is clear, both given how much attention companies and media allocates to the subject and given the amount of recently implemented and future proposed changes to emissions legislation. Since

16% of the overall global emissions of CO_2 comes from road transport, an alternative solution is needed [9]. Compared to the convectional internal combustion engine vehicles (ICEV) battery electric vehicles (BEV) have many advantages as well as some disadvantages. A BEV has high efficiency and can be non-dependent on fossil fuels. BEV also does not release any tailpipe emissions and create new use cases since they are quiet during operation. Some disadvantages with BEV are: the limited range, the higher overall investment cost, the short lifetime of the batteries in the storage system and the lack of infrastructure for charging the energy storage system [10]. Also, compared to the ICEV the amount of energy that can be stored in a battery per kilogram of battery weight is much lower than that of conventional fossil fuels [10]. Thus, for a BEV to reach the overall performance of an ICEV the energy storage system must occupy both a larger volume and add additional weight compared to the systems in the ICEV. This results in not only a incremental, but a radical change in the architecture of an vehicle. Consequently, even though there are large environmental advantages with BEV compared to ICEV, there are many problems that has to be solved and challenges to overcome. In order to successfully implement electric propulsion into a vehicle, multiple technologies and knowledge fields need to work in tandem. Some of the technology areas that has to be synchronized in order to successfully design an electric vehicle include: mechanical, electrical and chemical engineering.

This chapter will describe the basic components and functions of a battery electric propulsion system, with a focus on the so called energy storage system.

2.2.1 High Voltage Traction System

The system propelling a BEV can be called the high voltage traction system or HVTS. The most important components in a HVTS are: the energy storage system (ESS), the electric machine (EM), the battery management system (BMS) and the power electronics (PE). These components can be seen in fig. 2.8. The ESS enables storage of electrical energy which the EM is converted into kinetic energy, in order to facilitate the propulsion of the vehicle. The power electronics connects the ESS and the EM and converts energy, whilst the BMS monitors and controls the different components in the system [10].

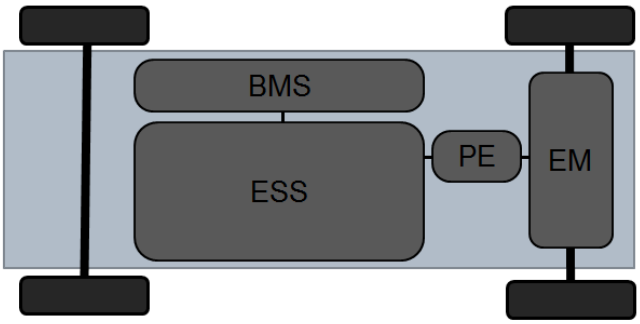


Figure 2.8: Description of most important component for a HVTS

The term high voltage commonly refer to a voltage that can be harmful to

humans. High voltage has different definitions depending on the application. In automotive applications, it is defined as voltage in the range of 30 to 1000 Volts alternating current or 60 to 1500 Volt direct current [11]. The reason for needing a high voltage is derived from the following law of physics, where P is power, V is voltage and I is current:

$$P = V \cdot I \tag{2.1}$$

To reach a certain required power it is necessary to increase the voltage and current. However, due to what can be derived about the power loss from the following equation, where R stands for resistance:

$$P_{loss} = I^2 \cdot R \tag{2.2}$$

It can be concluded that P_{loss} increases with current, hence it is more beneficial to increase the voltage.

In a car where a typical driving range is shorter and the mass of the car is lower than that of a heavy duty vehicle such as a truck, the nominal voltage is 360-450 volt in most cases. In heavy duty trucks, where driving ranges are long and mass of the vehicle is high, currents up to 800V is used to meet the elevated need for power. Volvo is currently using 600V Systems for their electrified buses and trucks.

2.2.2 Energy Storage System

An ESS is a component that stores the energy needed to propel a vehicle. For fully electric vehicles the ESS can consist of fuel cells and a hydrogen tank or batteries. In this project, batteries are to be used as the means of storing energy in the subsequent concept. Hence, the term ESS will hereby refer to a set of batteries. An ESS as well batteries are built by battery cells. Multiple battery cells are stacked, forming a battery module. Multiple battery-modules are then stacked to form an ESS module and multiple ESS modules finally form the ESS-pack.

The components of the ESS-pack are connected in series and in parallel to be able to deliver the desired voltage and capacity that is required by the vehicle. Cells are connected in series to form battery modules with a nominal voltage under 60V. This is done in order to avoid having a high voltage at the battery-module level and thus preventing the need for having the safety systems HV requires at this level[10]. Battery-modules are then connected in series and in parallel to be able to deliver the nominal voltage needed for the motor of the vehicle. To increase the total capacity of the ESS-pack while maintaining the nominal voltage, multiple ESS-modules are connected in parallel to form the foundation of the ESS-pack.

Together with a cooling system, a battery management system and a mechanical structure, the ESS-modules forms an ESS-pack, which can be mounted on a vehicle. The cooling system enables the function to, through cooling media, transport the heat generated in the battery-modules to the outside of the ESS-pack boundaries. The cooling system is operative on the battery-module level. The BMS is operative on both battery cell, battery module and ESS module level. The hierarchy of the ESS-pack is described in fig. 2.9.

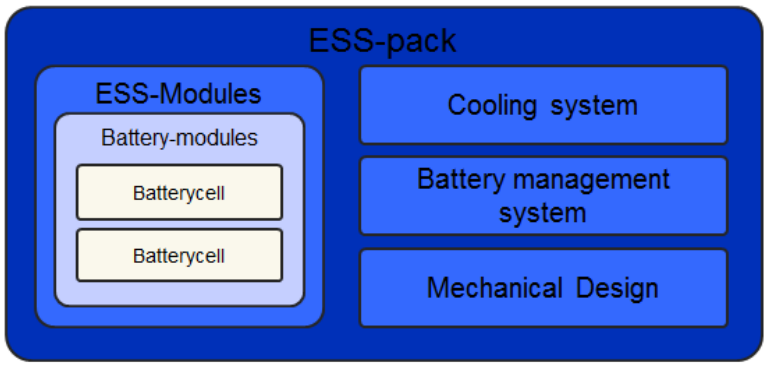


Figure 2.9: Hierarchic description of ESS-pack

2.2.2.1 Battery Management System

The battery management system monitors and enables the ESS to be operated in a safe and efficient way. To facilitate a safe and long lasting use of the ESS, it is crucial to constantly monitor the operating conditions of the system. Battery management systems have long been used in portable electronics, but the implementation in much larger ESS-packs intended for use in EV's are still at an early stage of development [12]. A BMS consists of hardware and software. To be able to monitor and measure battery parameters, sensors are mounted in the ESS. Outside of the ESS there are components which analyses the data from the sensors and enable proper management of the ESS.

The BMS monitors the current status of the battery, such as the so called state of charge (SoC), temperatures and other parameters which are presented and discussed in more detail in section 2.3.1 These parameters are of great importance to the driver of the vehicle, as well as for optimization and safety functions in the BMS. The other functions of the BMS are to operate the ESS in a safe and efficient way, both while propelling the vehicle and while charging the ESS. As the ESS is built up by multiple modules, containing multiple cells, there is a need to monitor the electrical and thermal properties of each cell to detect abnormalities to ensure that every cell is working inside its operational conditions. As the performance and capacity of the cells can differ, there is also a need to balance cells in order for them to work together efficiently and prevent damage and a shortened lifespan. This function is provided by the BMS as well.

The implementation of a BMS system offers increased lifespan of the ESS while minimizing the risk of a failure. As the ESS increases in cost, the relative small cost of a BMS can significantly decrease the cost for the ESS over its lifetime and increase the efficiency and the range of an EV[13].

2.2.2.2 Cooling system for ESS

The internal resistance in Li-ion batteries, connector and electronic components are producing heat during use. Heat buildup have a major influence on the performance and lifetime of an ESS-pack[10]. To increase lifetime and performance, the battery cells must be kept at a temperature span defined by the supplier. Therefore, thermal

management systems are vital and are always implemented in ESS-packs. In cold climates the low temperature can reduce the performance of battery cells, meaning that in this case the thermal management system can be used to heat up the ESS-pack before use. Cooling systems are usually enabled by air-cooled, liquid-cooled or refrigerant-based systems. A review of the latest progress in the area of thermal management for ESS-pack for EV is done by Huaqiang Liu in the article *Thermal issues about Li-ion batteries and recent progress in battery thermal management systems: A review*[14]

2.2.3 Electric Machines

When converting chemical potential energy to kinetic energy, electric machines (EM) have several advantages compared to ICE's. ICE motors have large losses leading to an overall efficiency of around 35%. EM's have in comparison an efficiency between 70 to 90 % [15]. EM's are also robust and reliable, having high torque and power density and a low cost compared to ICE's [16][17]. The EM can furthermore regenerate energy during braking and thereby reduce the overall energy consumption of the vehicle. An electric vehicle can offer a smooth and quiet ride which has been proven for example by the electrified Volvo bus used for public transportation in the Swedish town of Gothenburg [18]

There are two main types of electric motors, alternating current (AC) and direct current (DC) motors. DC motors are the least expensive and complicated of the two. This is in part due to them needing simpler power electronics. However, they require regular maintenance and have lower power density. DC motors have been used in small hybrid electric vehicles, but due to their need of maintenance and their lower power density, the AC motors have been the choice of technology for heavy duty and long haul applications. AC motors are less expensive, however due to the need for more complex and costly power electronics, the total cost of AC motors are higher than that of DC motors. This is in part because the batteries deliver DC-current, hence an inverter is needed in a AC-motor system. The higher power density of the AC motor and the higher efficiency are the major advantages that makes AC motors more suitable for heavy duty and long haul applications.

2.2.4 Power Electronics

The power electronics components enables the connection between the ESS and the EM. When using an AC motor, the main PE component is an inverter, which converts the DC current from the battery to AC current required by the AC EM. The inverter converts energy in two directions, both to the EM during propulsion and from the EM while regenerating energy under breaking.

There are many other components included within the umbrella term of power electronics present in fully electric vehicles. These are however not of interest for this particular thesis.

2.3 Battery Technology

The incorporation of batteries into vehicles is not a new concept. Certainly, all of those who are even vaguely familiar with the architecture of cars and trucks know that there are low voltage battery systems in every vehicle. These batteries are providing energy for functions such as the starter motor, interior and exterior electrical components etc. Even the concept of utilizing batteries for the propulsion of cars is not a new idea. The concept of electric vehicles first surfaced in the 1800:s, and gained some traction at the turn of 20th century. This development was however stopped by the rise of cheaper and more efficient gasoline powered cars, such as the Ford model T. It is only in the last few decades that the electric car has yet again gained some momentum. This is of course due to the heightened awareness of the effect that fossil fuel powered cars have on the environment [19].

When it comes to modern applications of battery power in electric vehicles, one specific technology has become dominant. This technology is is the Li-ion battery. The reasons as to how this has come to be are many. This section constitutes some of the knowledge required to understand the basic concept of battery technology with respect to its application in vehicles. It also aims at explaining why Li-ion batteries have become dominant and what their characteristics are.

2.3.1 Battery Parameters

Before trying to understand the battery technology in cars and commercial vehicles such as trucks, it is important to understand the performance measures of batteries. One measure of performance that is central when talking about vehicle energy systems is the gravimetric power density, which is measured in Wh/kg. This unit incorporates the energy storing capacity of a battery and relates it to the weight of the battery itself. Another unit that can be used in a similar way is the volumetric energy density, measured in Wh/l. Instead of relating the energy storage capacity of the battery to weight, the volumetric energy density relates it to the volume that the battery itself occupies [20]. Two other important parameters related to batteries are the gravimetric and volumetric power densities. These units describe how fast the battery can charge and discharge its electric energy in relation to its weight or occupied volume. All of the previously mentioned parameters can also be clustered into the categories specific energy density and specific power density. This since they relate energy and power to the weight and/or the volume of the battery [21].

Specific power and specific energy density are important when trying to understand how different battery technologies relate, both to each other and to other energy storage technologies. For example, when looking at fig. 2.10, it can be seen that the commonly used battery technology of Li-ion batteries has a much lower energy density than that of conventional automotive fuels such as diesel or gasoline. Even when factoring in the conversion efficiency, i.e. how much energy is lost during energy conversion, fossil fuels still store much more usable energy per liter than batteries [22].

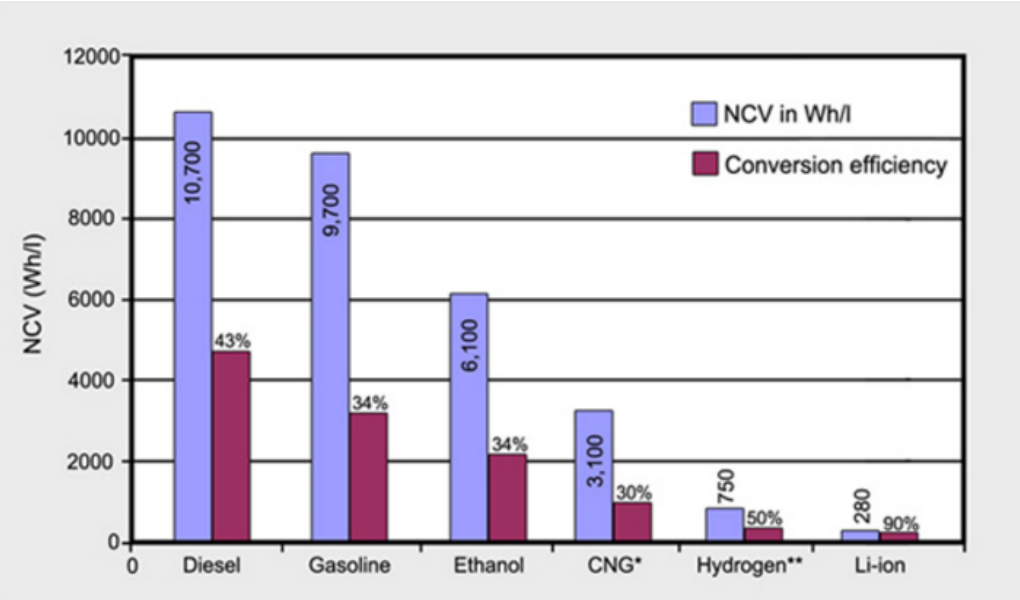


Figure 2.10: A comparison between the volumetric energy density of different fuel storing options [22]

Figure 2.11 shows how different battery technologies compare to each other. On the vertical axis of the graph there is specific power density and on the horizontal axis there is specific energy density. From the graph it can be concluded that Li-ion batteries (in general) provide the best balance between specific power density and specific energy density [20]. There are technologies such as super capacitors that can provide a much higher power output, but can sustain it for a much shorter time. Thus, Li-ion batteries are arguably the best overall compromise between the parameters power and energy that currently exist.

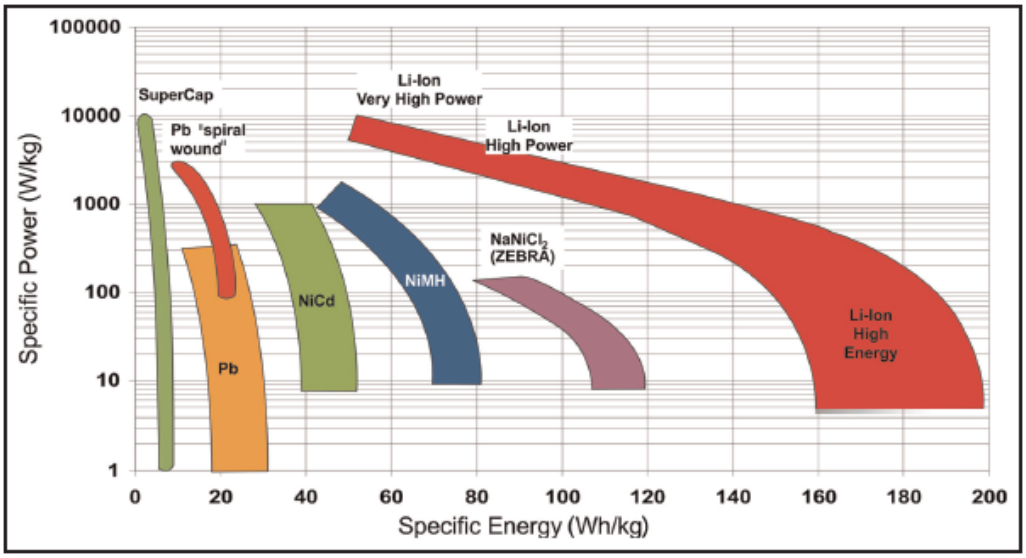


Figure 2.11: Specific power and specific energy density of different battery types [20]

Two other important battery parameters are the SoC, or state of charge, and the DoD, or the depth of discharge. When a battery is charged or discharged, it is the voltage within the battery that increases or decreases. When the battery is fully charged, the voltage is at its highest level, and when its fully discharged it is at its lowest level. The SoC is a measurement of the current capacity of the battery, whilst the DoD measures the capacity that has been used up during discharge. Both these measurements are displayed as percentages and are usually calculated through algorithms [21] [23]. However, for some battery technologies (such as Li-ion batteries), measuring the current capacity of a battery is not as simple as it is to measure the fuel level in a diesel truck. The capacity of the battery can fluctuate depending on several different factors, one of which is the ambient temperature at which the battery operates. Batteries also degrade over time, meaning that they lose some capacity due to the internal chemical processes of the battery [24]. These factors makes it hard to give a good estimation of the capacity of the battery, which is why the battery percentage displayed on a phone or a laptop can read 10% whilst in actuality, it is at 2%. This discrepancy can consequently result in a, from a users perspective, premature shutdown of the cellphone.

Even though it is hard to get at good estimation of the capacity of a battery, it is very important to try and estimate it as closely as possible. This is because Li-ion batteries' sensitivity to overcharging and over discharging [24]. Overcharging a Li-ion battery can for instance lead to the internals of the battery reacting with each other, causing an exothermic reaction. This in turn can, under some extreme circumstances, lead to a catastrophic failure of the battery called a thermal runaway [25]. More about this failure mode can be found further on in this chapter. Because of the risk of battery failure when the Li-ion battery is over charged and or over discharged it is important to have a buffer zone at the top and bottom of the battery capacity spectrum, as can be seen in fig. 2.12. With this system in place, small errors in the calculation of SoC and DoD can be permitted, without the battery failing catastrophically [24].

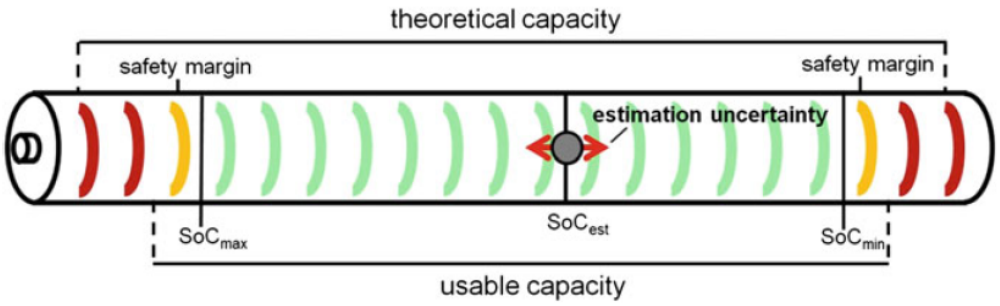


Figure 2.12: Figure displaying the safety margins in the prediction of SoC [24]

Of course there are several other battery parameters that could be relevant depending on what the intended application of the battery is. However, the above mentioned are the most relevant for this thesis.

2.3.2 Li-ion Batteries

Much of the current electrification of vehicles centers around so called Li-ion batteries. This section aims at explaining why this is, and also the basic working principles of Li-ion batteries.

2.3.2.1 The merits of Li-ion batteries

There are a wide range of different battery technologies available. In principal, they all have the same purpose, which is to store electrical energy from and distribute electrical energy to the components that are connected to them. The merit of different battery technologies does however vary depending on their intended application. Below, some common battery technologies are presented and evaluated with respect to their merits as a battery intended for automotive applications.

Lead-acid

The Lead-acid battery is a trusted technology within the automotive world. This since it has been used for a very long time to supply low voltage power to auxiliary systems in vehicles. It has a relatively low energy density, but is also much cheaper than many other types of batteries. This is in part due to the low cost of the materials that make up Lead-acid batteries. A Lead-acid battery is also safer than some of the alternative technologies and has advantages when it comes to recycling. However, due to its low energy density, the Lead-acid battery is not a practical solution for providing a high amount of power in applications where weight and space are issues, such as in the case of electric vehicles. The technology also has problems with both lifetime and its ability to receive large currents. All of the above parameters, in combination with several other, makes Lead-acid batteries ill suited as a base for a traction battery [20].

Nickel–metal hydride

A more promising battery technology is Nickel-metal hydride (NMH). This is supported by the fact that a couple of years ago, Toyota launched a generation of its iconic hybrid electric car, the Prius, with the option of having either Nickel-metal NMH or Li-ion batteries. According to Toyota the battery technologies delivered similar performance and cost about the same to manufacture. However, the Li-ion battery pack weighed less, meaning that the cars equipped with this battery could have more features fitted to them [26]. When it comes to the energy and power density of NMH batteries, both are much higher than that of Lead-acid batteries. However, with this increase in performance there is also an increase in cost in comparison with Lead-acid batteries. The technology is furthermore quite stable from a safety perspective as well. It is also quite technically mature. However according to Budde-Meiwes et. al [20], the research into this technology is not very active. This, coupled with the fact that Li-ion batteries have the potential for slightly higher performance makes it not likely that NMH batteries is the future for fully electric vehicles.

Li-ion

As has been discussed earlier in this chapter, Li-ion battery technology is dominant within the electric vehicle market. Some reasons why this is the case have already been highlighted, such as the relatively high energy and power density of the technology. There are however several other important things to know about the merits and demerits of Li-ion batteries. First of all the technology has some more advantages over competing technologies, other than the ones mentioned previously. Two of these advantages are that Li-ion batteries have, relative to other battery technologies, a high efficiency and a long life span [13]. Efficiency in this context refers to the amount of the energy stored within the battery that can be charged and/or discharged when accounting for the energy loss present in these processes [27]. This loss of energy is in part governed by the internal resistance of the battery, which can of course change throughout the lifespan of the battery [23]. Further advantages with Li-ion batteries include their ability to function efficiently, even with currents as high as is necessary in an electric vehicle. An additional factor that plays in the favour of Li-ion batteries is that a lot of research is being conducted into this specific field of battery technology. The biggest disadvantage with Li-ion batteries is with regards to their safety. The battery technology is, sensitive to overcharge and over discharge. This means that it requires a battery management system to make sure that over charge and over discharge does not occur. In other words, Li-ion batteries are less intrinsically safe than the other battery technologies mention in this section. Another disadvantage is that Li-ion batteries are relatively expensive [20]. This said, a lot is being done in order to drive down prices of Li-ion batteries. The price in dollar per kilowatt-hour has steadily gone down in the last couple of years according to Bloomberg New Energy Finance, as can be seen in fig. 2.13 [28]. In other words, even though the technology is expensive now, it seems that it does not necessarily have to stay that way.

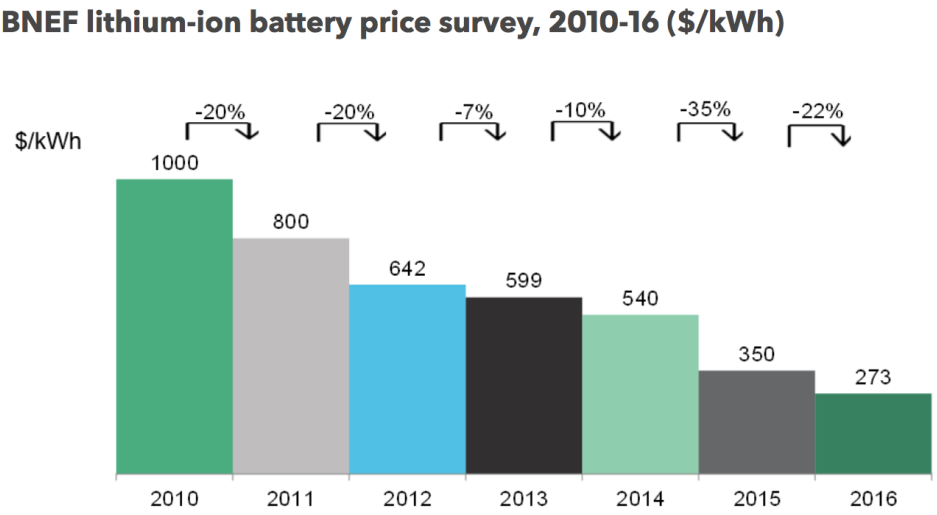


Figure 2.13: Price of Li-ion batteries in $/kWh [28]

Given the above mentioned battery technologies and their respective merits

and demerits, it is easier to see why Li-ion batteries have become the dominant technology. Even though they have several drawbacks, they still offer the best overall performance when evaluated in relation to other battery technologies. In section 2.3.5 a future forecast of Li-ion battery development is provided. In that section, several different ways of trying to alleviate the weaknesses of Li-ion batteries are presented.

2.3.2.2 Basic Principles and Architecture

This section describes the building blocks of the battery cells, as well as some basic functionality that is included within the cell. This section should therefore not be considered as an exhaustive explanation of Li-ion battery chemistry and functionality since only concepts necessary to understand this particular project are included.

Core Components

As can be seen in section 2.3.2.1, a common way of distinguishing between different battery technologies is by referencing the interior materials that make up the battery. This is of course true also for Li-ion batteries. Li-ion batteries come in many shapes and forms, which is why using the term Li-ion simply alludes to the overall umbrella term for a bigger group of batteries [25]. To distinguish the different variants from each other, one usually refers to the active cathode material that sets them apart. Some common active materials, and therefore Li-ion battery variants are: Lithium Cobalt Oxide or LCO ($LiCoO_2$), Lithium Manganese Oxide or LMO ($LiMn_2O_4$), Lithium Iron Phosphate or LFP ($LiFePO_4$) and Lithium Nickel Cobalt Aluminum Oxide or NCA ($LiNiCoAlO_2$). It is not useful to go through the merits and demerits of each of these battery configurations in this report. However, a comparison of the different gravimetric energy densities of the technologies is provided in fig. 2.14 [27].

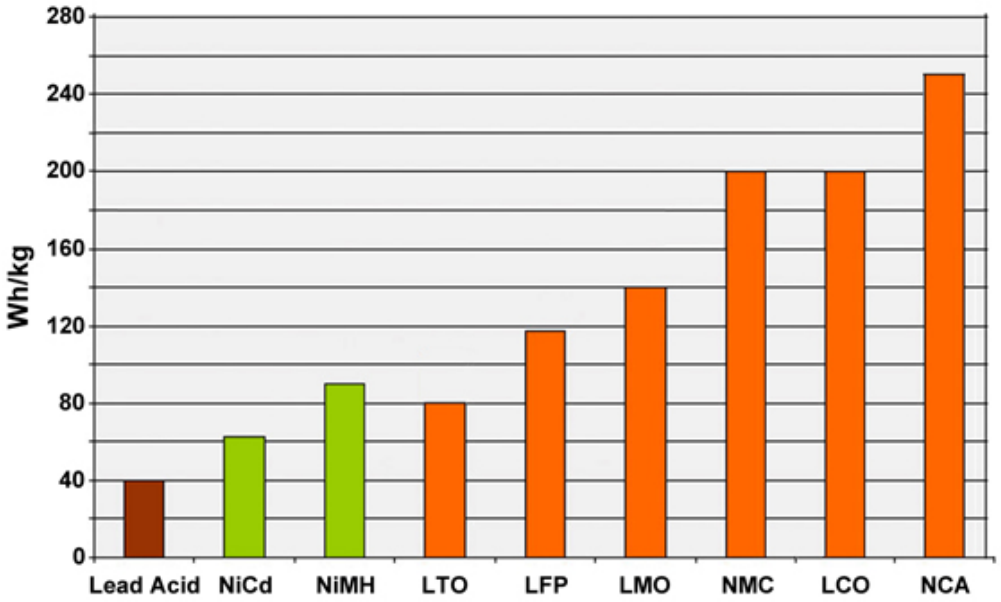


Figure 2.14: Gravimetric energy density of different Li-ion batteries [27]

Inside of Li-ion batteries, as in every other battery, there is a cathode and an anode. The cathode is what is called the positive side and anode is the negative. The material that constitute the electrodes of a Li-ion battery depends on which variant that is being referred to. The cathode material varies between everything from cobalt oxide to iron phosphate, whereas the anode is usually made up of graphite [29]. The main function of a Li-battery however does not change. It works by Li+ (Li-ions) moving between the cathode and the anode. The direction with which this occur decides if the battery is charged or discharged. Li+ moving from the anode to the cathode means that the battery is discharging and vise versa. The complete process is best explained by Battery University:

> *'When charging, a buildup of positive ions forms at cathode/electrolyte interface. This leads electrons moving towards the cathode, creating a voltage potential between the cathode and the anode. Release is by a passing current from the positive cathode through an external load and back to the negative anode. On charge, the current flows in the other direction [30].'*

Between the cathode and the anode there is something called a separator layer. The separator has two main purposes; to isolate the cathode and the anode from direct contact with each other and to facilitate the transportation of ions from one pole to the other. The first function mentioned is quite easy to understand. If the two pole surfaces were to come into contact with one another, the battery would be short-circuited [25]. The other function is a little bit more complicated. The short explanation is that it works by having the separator moistened with the so called electrolyte. The electrolyte has the chemical composition necessary in order to make the Li+ transportation through the separator layer possible [30].

Different Architectures

As mentioned previously there are several different types of Li-ion battery chemistries. However, there are also several different types of Li-ion battery geometries. Each of these geometries have different advantages and disadvantages, again depending on the intended application of the battery cell. The three most common Li-ion battery form factors are; cylindrical, prismatic and pouch. These are presented in fig. 2.15, fig. 2.16, fig. 2.17 respectively. As the fig. 2.17 illustrates, the cathode, the anode and the separator materials inside cylindrical Li-ion batteries are wound around a central core. This packaging is sometimes called the "jelly roll". Prismatic and pouch cells can also be packaged in this way, but they can also have their layers stacked. The prismatic cell illustrated in fig. 2.16 contains a jelly roll. What separates the prismatic and the pouch cells from cylindrical cells are their much flatter form factor. This makes them very useful in applications were thickness is a critical parameter, such as cellphones. The main difference between pouch and prismatic cells is that prismatic cells have a protective casing incorporated in the cell. The pouch cell, illustrated in fig. 2.15, usually has a laser welded foil shell, making it generally less expensive to manufacture, but more fragile than the other two cell types [24].

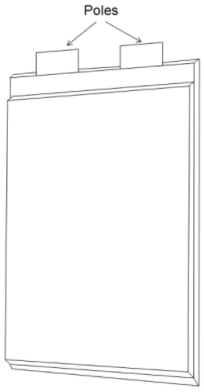


Figure 2.15: Pouch battery

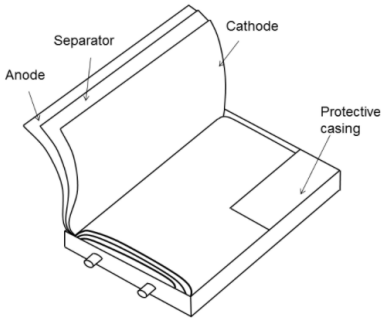


Figure 2.16: Prismatic battery

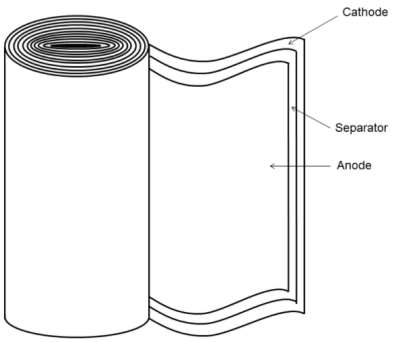


Figure 2.17: Cylindrical battery

When analyzing the main advantages and disadvantages of the previously mentioned different form factors, there are a couple of main areas to incorporate. To reduce the risk of critical failure of the battery cell, some safety mechanisms are included within the cell itself. In order to understand what these critical failures are, please read section 2.3.3. The inherent safety mechanisms present within a battery cell again depends on the form factor. Generally it can be said that cylindrical cells have more safety built in that prevents for example pressure build up and helps the cell retain its rigidity. Pouch cells on the other hand generally have less inbuilt safety features and therefore relies heavily on the structure that is build around the cell.

2.3.3 Dangers and Failure Modes

When increasing both size and energy density of an ESS implemented in a vehicle, different safety concerns arise. Fire caused by failures in Li-ion batteries have created headlines pointing out both EV [31] and smaller gadgets like hoverboards [32] as a safety problem. These problems are barriers for widespread adoption of battery technology into vehicles. Xuning Feng et al.[33] state that engineers and researchers are still not well equipped with sufficient knowledge about the failure mechanism of Li-ion batteries. Their article, *"Thermal runaway mechanism of lithium ion battery for electric vehicles: A review"* describes the failure mechanisms of Li-ion batteries and provides guidance when designing an ESS-pack with respect to making it safer. The following sections are based on their findings and is a executive summary of the content of the above mentioned article as it relates to this thesis.

2.3.3.1 Thermal Runaway

Thermal runaway (TR) is an exothermic chemical reaction where anode, cathode, and electrolyte react irreversibly [34]. During a TR the battery self-discharges and the energy stored in the battery is released resulting in smoke, fire and/or explosion. The rate of self discharge determines the severity of the TR where a high rate of discharge is more severe. TR in a single cell can generate enough heat to trigger

TR in the surrounding cells, resulting in a propagation of a TR event. Propagation can also occur from cells to modules and result in fire, explosion and destruction of the complete ESS-packs. It is therefore of highest importance to prevent both the cause of TR and its ability to propagate.

To handle the inherent safety problem with Li-ion batteries, standards and regulations have been introduced to reduce the risk of failure. These documents defines compulsory test standards and design guidelines for development of ESS intended for use in EV's. However, even if the risk is reduced, TR as a result of abuse condition during normal use can emerge. The abuse condition can be divided into three categories, mechanical, electrical and thermal abuse. These abuse conditions are related to each other. This as one can lead to another, which can finally lead to a TR as shown in fig. 2.18. For example, mechanical abuse can result in a short circuit which is a common cause of electrical abuse. The short circuit results in a release of heat which can lead to thermal abuse. In thermal abuse the battery is heated to temperatures that triggers a TR. The TR triggering action can therefore have its origin in each of the three abuse conditions. These abuse conditions will be further described in the following sections.

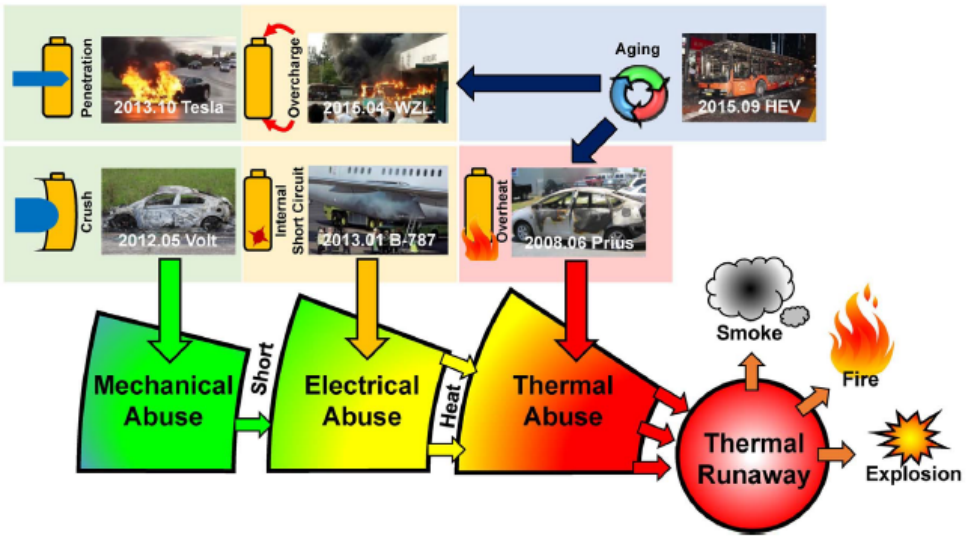


Figure 2.18: Li-ion battery failures correlated to abuse conditions [33]

Mechanical Abuse

Mechanical abuse means deformation or penetration of an ESS-pack. When implementing electric propulsion in a truck, mechanical abuse of an ESS is possible in case of a frontal collision or a side impact by a car. Mechanical abuse of an ESS-pack may lead to two severe consequences, internal short circuit (ISC) or leakage of flammable electrolyte which both can trigger an TR. ISC will occur when the separator which separates the anode and the cathode will loose its function due to deformation and penetration.

Studies on deformation of battery cells have shown that large deformation is possible without triggering an ISC. However, this is with regards to controlled

deformation in a favourable direction, meaning that this finding is of less practical use. Penetration is a more severe mechanical abuse scenario than deformation. If a battery cell is penetrated, ISC can be triggered instantly. The characteristics of the penetration determines the effect of the ISC where an unfavourable penetration results in a high self-discharging rate. The severity level of an ISC can be evaluated by the self-discharge rate and the heat generation. The higher the self-discharge rate the higher the temperature increase. Figure 2.19 describes the severeness of a ISC and introduces 3 levels of ISC where the severity level increases with increased self-discharge rate.

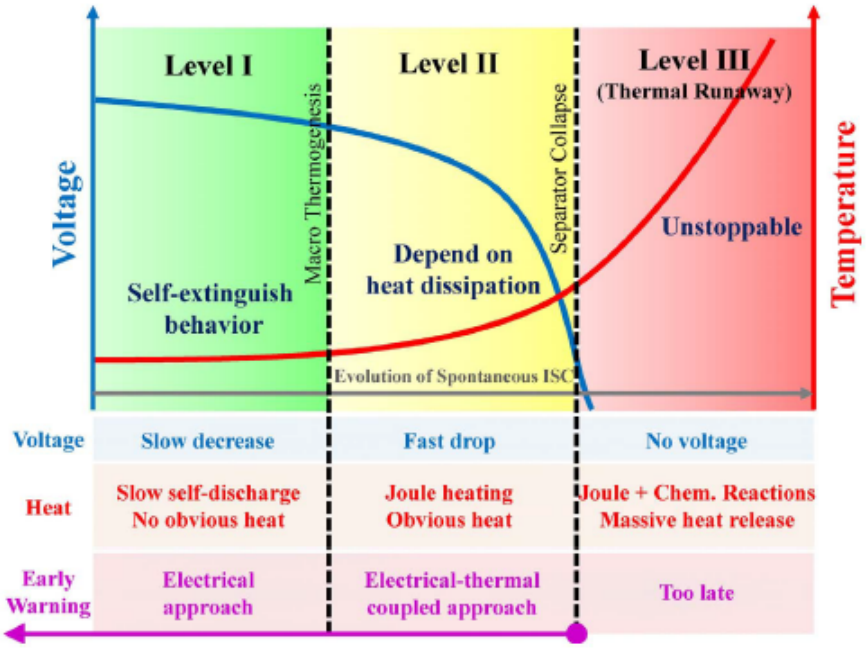


Figure 2.19: Severity level of internal short circuit of Li-ion batteries [33]

Maleki et al.[35] stated that up to 70% of the energy stored in a cell is released in 60 seconds, as a result of penetration and ISC. A penetrated cell will experience increased temperature until the cell is fully discharged. If the temperature is over a critical temperature, TR will occur. A cell must therefore be designed to release its energy more slowly if being penetrated, resulting in a slower temperature increase and thereby a decreased risk of TR.

So far, only large plastic deformation have been discussed. However, small elastic deformations can cause failure in an ESS-pack as well. Cells and and battery-modules are connected by wires or rods. In the long run, the wires and rods can fail resulting in increased resistance, heat generation and TR if exposed to elastic deformation. It is therefore important to mount an ESS-pack such that it will not be exposed to excessive deformation, warping or bending during normal operation.

Electrical Abuse

Besides the electrical abuse caused by mechanical abuse, problem and failure can origin from the electrical domain only. The operational conditions of an ESS is

monitored by the BMS which enables operation of the ESS-pack in safe and efficient way. External short circuit (ESC) and overcharging are two plausible causes of electrical abuse. ESC can be caused by deformation of cables or connectors in case of a crash and by intrusion of water or other conductive material, resulting in SC. ESC generates heat, but compared to ISC the heat is not affecting the cells which reduces the risk of TR. ESC leads to a peak current which can be detected by the BMS. The effected electronic components can then be cut of thereby reduce the hazard of a TR.

When an ESS is overcharged, excessive energy is directed into the battery. This results in heat generation which can trigger a TR. As the ESS is overcharged, more energy is stored and can be released in case of a TR. This results in a TR more severe than other abuse conditions. Both ESC and overcharging can be monitored and detected by the BMS and the resulting hazard can be therefore be reduced. To reduce the risk and hazards caused by electrical abuse it is therefore of highest importance to ensure that the BMS is fully functional even in case of a crash.

Thermal Abuse

Thermal abuse of an ESS is most often a result of mechanical or electrical abuse, but some causes of TR is not yet discussed. Vibrations caused by normal operation can effect an ESS-pack. Both cells, internal connections in the ESS-pack and BMS can malfunction as a result of vibrations. It has been observed that cells and connections can be damaged by vibrations resulting in increased resistance and elevated temperatures. Vibrations have also led to malfunction of sensors resulting in loss of safety function of the BMS. These problems are mainly in the electrical domain but the cause origins in the mechanical domain and can therefore be handled in this project.

Thermal Runaway Simulations

To understand the TR mechanism in an ESS-pack more refined simulation models needs to be developed. These simulations must be based on mechanical-electrical-thermal coupled models to include all aspects of TR introduced in this section. To understand the behaviour of TR in an ESS-pack, one must understand mechanisms on many levels of an ESS-pack. Lots of studies have been done on deformation on the cell level and some on the battery-module level. However, less studies have been done to analyze complete ESS modules. Only mechanical-electrical coupled models have been developed on cell and ESS-module level and there is thus a need for more complex models to be developed in order to fully simulate deformation of an ESS-pack.

Summary

Knowledge in thermal runaway mechanism of Li-ion batteries is of great importance when implementing ESS-packs on a vehicle. This since the vehicle must be able to handle crash situations without exposing the driver or the environment to danger.

Mechanical abuse is the abuse condition that will be handled in this project. Abuse conditions originating from electrical and thermal domains is mostly outside of the domain of this project, but some of its causes originates from the mechanical domain and can therefore be relevant in this project.

Understanding how abuse conditions leads to TR is a complex subject which requires complex simulation models that has not been developed yet. In the absence of these models, no deformation or penetration of the ESS-pack can be allowed in order to ensure that it is fully functioning and safe in operation.

2.3.3.2 Reducing the Hazard in case of thermal runaway

Xuning Feng et al.[33] states that minimization of the hazard caused by TR can be achieved in three ways; by improving anti-TR properties of the battery technology, by passive safety and BMS and by reducing the secondary hazard. To improve anti-TR properties, materials of the components in the Li-ion batteries can be improved to enable higher thermal stability and slow down TR chain reactions, which primarily determines the anti-TR properties of the battery. Passive safety can be improved by the structural design of the battery pack, placement of sensitive connectors and wire harnesses and implementation of fuses to cut of damaged components, and implementation of more advanced BMS. The last way to reduce hazards caused by TR is to reduce secondary hazards. If a TR emerges in a cell, the propagation of TR to adjacent cells and entire modules must be prevented. The energy released during a TR of a single cell is relatively small and can be contained. Propagation of TR to a complete ESS-pack releases the total energy of the pack leading to much more severe consequences. Protection against TR propagation must therefore be considered when designing ESS modules and when combining them to an ESS-pack. The emergence of TR is dependent on the chemical mechanisms in the cell, while propagation of TR is dependent on heat transfer properties. It is therefore desirable to design an ESS module with thermal barriers and systems to effectively distribute the heat generated by TR of a single cell.

2.3.4 Suppliers of Batteries

The market for ESS solutions is evolving at a high rate. The players on the market offers solutions on different levels, from cell level to complete ESS. The large suppliers for ESS solutions for EV offers scalable and modular ESS solutions [36][37][38][39]. Based on the cells which the supplier are using custom modules can be combined to scalable ESS modules with customizeable performance and requirements.

SAFT Batteries

It is not easy to get a concrete sense of how ESS-pack suppliers can customize their offered solutions according to the demand of their customers. With this in mind SAFT, a company supplying battery packs to numerous industries (the automotive sector being one of them), was contacted. A representative at SAFT answer a couple of questions regarding how their company viewed the customizability of their products. He could confirm that, given a large enough order volume, most solutions

are possible. This means that, depending on how the partnership in question is outlined, tailor made solutions can be made with regards to everything from the battery chemistry of individual cells to the battery modules and the ESS-pack. Although he stressed that at the present moment, the trend within the industry is to have of the shelf solutions. This to reduce the cost for both the supplying and the buying party. A higher amount of customization to fit the customer need will lead to an increase in cost, presumably due to higher development and manufacturing costs [40].

Volvo Group

Volvo is currently buying the ESS-systems used in their products from external suppliers. In the long term it is possible to buy cells from suppliers and design and build the ESS-solutions in-house. However currently it is unclear if this will be Volvos strategy going forward. This since such strategy is not publicly available information. It can be said though that, in an ICE vehicle, the complex component is the engine. The energy storage system, i.e. the diesel tank, is more simple in comparison. For a BEV it is the opposite. The electric motor is a relatively simple component and the ESS is complex. Volvo is currently designing and manufacturing their own ICE, in order to be competitive [41]. For a fully electric truck the ESS-system will be the complex and expensive component. This means that it could be argued that, in the long run, it could therefore be advantageous to have the competence to design and build ESS solution in-house to be competitive.

Automotive manufacturer - ESS supplier relationship

The partnership between an automotive manufacturer and its ESS-suppliers are complex due to the novel technology and the high rate of development. The ESS suppliers are restrictive with information given about their products. The supplier can only provide information about how their product is supposed to be used and state the conditions in which the product can be used in order to guarantee safe and efficient use. Over and above that, the ESS-pack must be treated as a black box. In the process of designing an ESS solution for a fully electric truck the battery supplier and the automotive manufacturer will, as alluded to by the representative at SAFT in the section above, cooperate to develop an ESS-pack. This in turn results in a list of requirement that will form the basis for the mechanical requirements of the ESS.

2.3.5 Future Battery Technology

There are many different ways that the battery technology is currently being improved. The future of batteries is, as with any technology, very uncertain. Every estimate of future energy and power density has to be taken with a grain of salt, since it depends on many factors. The future of any product depends on things such as: the basic level research, current product offerings, manufacturing demands and marketing [42].

With the above mentioned in mind, it should be said that a large part of the future for BEV lies within new battery chemistries currently being developed. There are several alternative technologies available that could potentially replace the li-ion batteries the we know of today [42]. One of these is what is called solid state lithium batteries. Solid state is an umbrella term for several different chemistries, each of which have different merits and demerits. This said, what constitute all solid state lithium batteries is that they have solid electrolytes that are non-flammable, as opposed to liquid electrolytes within current Li-ion batteries that are flammable. This means that much of the dangers mentioned in section 2.3.3 potentially could be circumvented using solid state technology, which in turn could lead to a safer battery in many different ways. There would for instance be less concerns with monitoring the batteries since the consequences that current Li-ion batteries have in terms of - for example - overcharge is not present in solid state lithium batteries. There are also benefits to be gained with respect to longer cycle lifetimes, energy density and packing when implementing to solid state batteries compared to conventional Li-ion batteries. The disadvantages with using solid state technology however is that at present time it cannot obtain the cycle performance required in order for it to be a viable replacement for conventional Li-ion batteries. This is mostly down to the inefficiency of the solid electrolyte. There are for instance problems with the solid electrolyte having to act both as the conductor of ions as well as the separator between the cathode and the anode. These problems are currently being researched heavily throughout the battery science community. However, as the non-solid Li-ion batteries currently are widely available and a relatively mature technology, those are the ones currently used in BEV's.

There are several other potential improvements that could be made to Li-ion batteries for them to be an even more viable energy storage solution. One of this improvements is to change the material that makes up the electrodes in the Li-ion battery. As was described in section 2.3.2.2, there are many electrode materials used in commercially available Li-ion batteries. Much of the research being conducted in future electrode materials such as Li-S (lithium sulphur) and Li-Se (lithium selenium) are focused on making Li-ion batteries even more energy efficient, having higher specific power and energy densities [43]. There are however those who thinks that the main focus of future research on Li-ion batteries should be the relatively low energy density, but rather the issue of making them more intrinsically safe. Xuning Feng et. al proposes an increase in intrinsic safety by for example surface coating the cathode to inhibit reactions leading to critical failures. They also propose alterations being made to the electrolyte to reduce its flammability as well as changing the material of the separator in order for it to be more heat resistant [33].

2.4 Heavy Duty Truck Technology

This section addresses the aspects of heavy duty trucks that are important when an ESS-pack is to be implemented. This with a focus on vehicle architecture, vehicle dynamics and collision safety.

2.4.1 Vehicle architecture

The SSV is categorized as a heavy duty truck and is presented in fig. 2.20. The term heavy duty refers to the maximum allowed weight of the vehicle, as defined by law. The specifically allowed weight of the vehicle, including the cargo, differs between different jurisdictions. In Sweden for instance, the maximum allowed weight of a truck is governed by several different parameters, two of which is the so called "load class" of the road and the overall length of the vehicle between the first and the last axle in the rig. In general it can be said that the maximum allowed weight for trucks in Sweden is around 65 000 kg [44].



Figure 2.20: Isometric view of the single specified vehicle

Another characteristic of the SSV is that it is a so called tractor. This means that the vehicle is made to pull some sort of trailer. The opposite of a tractor is a so called rigid truck, were the cargo is hauled by a superstructure that is directly mounted on the vehicle. The attachment point for the trailer on the tractor is a u-shaped disc component called the fifth wheel, as can be seen at the back of the SSV in fig. 2.20. Looking at the figure it can also be concluded that the SSV is a so called 4x2 tractor, meaning that it has four wheels in total, two of which are driven [41].

When it comes to the core architecture of the SSV, it all revolves around the two frame members that run front to back in the vehicle, as can be seen in fig. 2.21. All components, from the engine and the cab to the fuel tanks and muffler are attached to these frames. The frames are connected by cross-members which gives the chassis its torsional stiffness. Additional crossbeams may be mounted on the frame to distribute the torsional forces on the chassis[45]. The type of mounting method used is dependent on the intended placement of the part on the truck chassis. A common place to mount assemblies on a truck such as the SSV is on the side of the frame. This type of mount usually consist of two or more consoles that are attached to one of the beams via screw joints. The consoles are then attaches to an assembly, for instance the fuel tank as presented in fig. 2.22 [41].

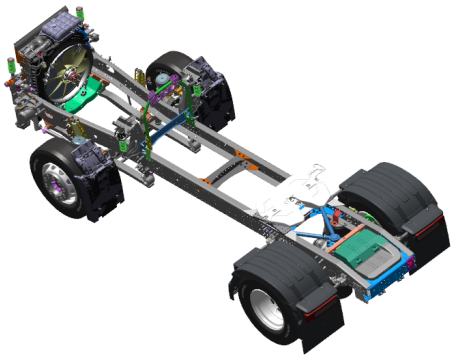


Figure 2.21: Stripped version of the SSV

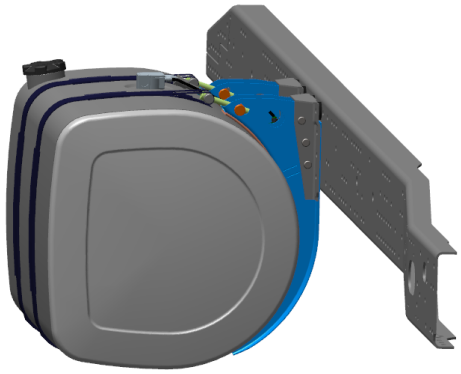


Figure 2.22: A fuel tank with mounting

Almost all of the trucks currently within the Volvo Group range are running on some sort of fossil fuel, the majority of which utilizes diesel as propellant. This means that much of the development of trucks up until today have been focusing on components that are associated with the ICE. The ICE and its surrounding components have arguably historically been the most technologically demanding elements of the truck. This fact has logically had a lot of influence on how the SSV looks as well as how its components are packaged. In fig. 2.23 a view from underneath the truck is provided. This figure shows how the the frame and the chassis are designed and how all components are mounted. Between the frames at the front, the ICE (in green) is mounted. In the lengthwise direction of the vehicle the engine is followed by the clutch, the gearbox and the prop shaft. Since the prop shaft rotates, there is only a limited amount of components that can be mounted in between the frames. At the sides of the truck, between the wheel axles, the fuel-tanks, the muffler and the urea box are mounted. All of these components enable the functionality of the ICE in some way, helping with reducing noise, storing propellant and reducing emissions. Right at the back of the truck, the 24 volt battery system is mounted, which can be seen as the grey box in fig. 2.23.

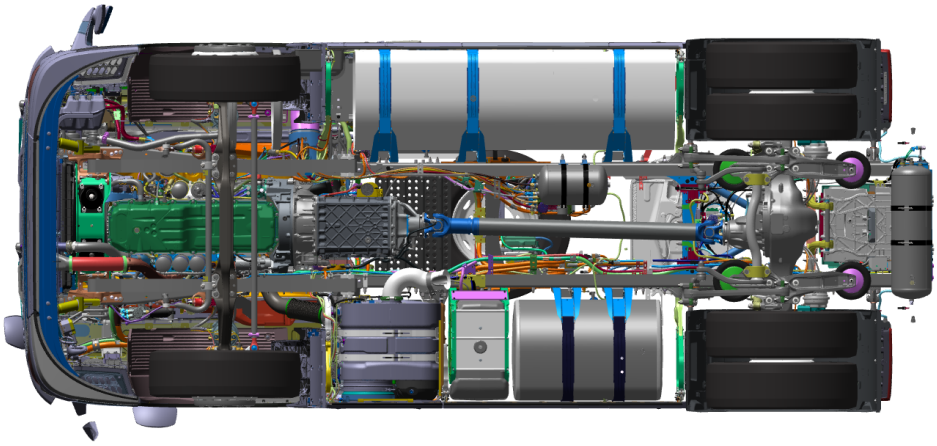


Figure 2.23: View from below SSV

Obviously there are many other components and subsystems present in the SSV. The ones mentioned above are however the most critical for the purposes of this project. This since they all belong to the propulsion system within the truck that is about to be replaced.

2.4.2 Vehicle dynamics

The subject of vehicle dynamics is both a complex and broad subject. In short, the majority of what is included in the term vehicle dynamics can be introduced as by Thomas D. Gillespie:

> *'... the motions accomplished in accelerating, braking, cornering and ride - is a response to forces imposed, much of the study of vehicle dynamics must involve the study of how and why the forces are produced [46].'*

To be able to fully take vehicle dynamics into account when designing automotive parts, a thorough theoretical knowledge base within the subject is necessary. This in order to understand and be able to analyze the results that are obtained when testing components. A theoretical knowledge is also important in order to prevent unfeasible concepts from being selected early in development, saving both time and money [46]. With this in mind, the following sections deals with subjects related to vehicle dynamics that are deemed relevant for this project.

When talking about mounting components on a truck, it is important to understand how components influence the chassis and vice versa. There are aspects related to strength of materials and structural mechanics to take into account. This to make sure that stresses and strains within the components are maintained within acceptable levels when the vehicle is operating under "normal working conditions". The term "normal working conditions", in this particular case, refers to loading cases experienced by components within the truck when the vehicle is used in a similar way to what it was intended for. There are of course abnormal working conditions,

such as collision scenarios. These are however allocated to section 2.4.3.

2.4.2.1 Strength and stiffness

Within the truck, the frames and crossbars are providing the stiffness necessary for the chassis. Despite this fact, the beams are designed to be a little bit flexible in order to relieve some of the loading experienced by for example the suspension components when the truck is driving on rough roads. Thus the frame absorbs some of energy that would otherwise be allocated to the suspension components. This also means that the frame can twist up to 2 degrees per meter when a torsional load is applied. This load scenario can occur for instance when the front of the truck hits a curb. With one wheel going up and the other staying on the initial road elevation, a twisting motion is initiated at the front of the truck[47]. The frame is designed to be able twist and flex and this is one of the working principles of the truck. The frame is designed torsional weak to be able to handle the loads experienced in normal driving conditions. New concepts or component must therefore yield to this working principle to be able to maintain the overall function of the truck. Since trucks made by Volvo are modular, meaning that they come in thousands of configurations it is of highest importance to design each component in such a way that it enables the working principles of each truck configuration. Since the vehicle dynamics aspects of the truck is very complex, Volvo have developed design guidelines to enable design of new components that are compatible with the truck from a vehicle dynamic perspective.

For components mounted on the frame in between the wheel axles, for example the diesel tank described in the previous section, components must not be stiffness adding. If a component would be stiffer than the frame it would change the working principle of the truck. The component would also be exposed to very high levels of stress, which would result in a mechanical failure of the component. Adding a stiff component on the weak frame would also result in increased stress levels in the interface between the component and the frame.

Depending on the application of the truck, very large components can be mounted. For tippers, tankers or firetrucks large and stiff components are mounted on the chassis. To be able facilitate this and manage the stresses and strains from the normal driving conditions, an extra frame is mounted on top of the chassis, which can be seen in fig. 2.24. In order to educate their customers and convey knowledge Volvo have developed Volvo bodybuilder information[45] that describes different types of body builds and how to configure them.

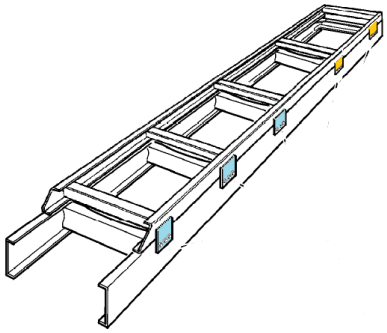


Figure 2.24: Additional frame mounted on main frame

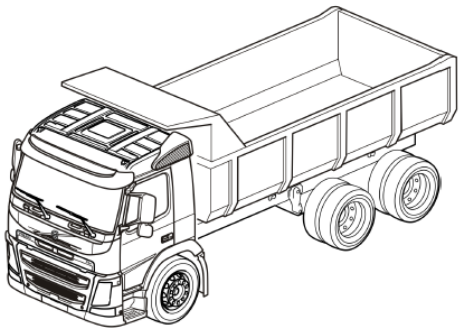


Figure 2.25: A tipper

The bodyworks available for Volvo trucks can be characterized from flexible to stiff. In order to maintain the torsional stiffness of the chassis, the type of bodywork fastener must be carefully chosen. For a torsionally flexible bodywork, (for example a tipper shown in fig. 2.25) the bodywork can be stiffly attached to the truck without changing the torsional stiffness of the chassis. For a semi-torsionally stiff or stiff bodywork, elastic fasteners must be used in order to not add torsional stiffness to the truck. Elastic fasteners disengages the stiff bodywork from the frame end enables it to flex and twist. The Volvo bodybuilder instructions [45] state that the front attachments marked in blue in fig. 2.24 must be elastic and attachment in the back, marked in orange, must be stiff. To arrange a stiff attachment the main frame and extra frame is connected by steel plates connected by bolts which can be seen in fig. 2.27. To arrange a flexible attachment, a rubber bushing or a spring is added in order to enable relative motion. A flexible attachment can be seen in fig. 2.26

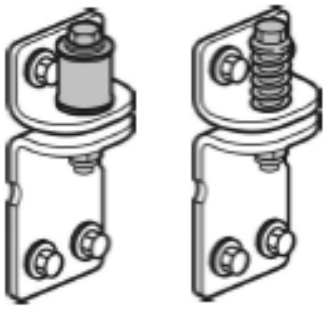


Figure 2.26: Flexible attachments



Figure 2.27: Stiff attachment

Up until now, only small components have been mounted on the frame between the axles. When implementing much larger components (as in the case of an ESS-pack), it is not possible to mount them as it has been done previously. When a component is mounted in a way that is contrary to the design guidelines one must be aware of the consequences, not only for the component that is to be designed, but also that the major working principle of the truck may be changed. Due to the

complexity of such a concept, a FE-analysis must be performed in order to evaluate any concepts.

2.4.2.2 Excitation and natural frequencies

Components mounted on a truck are exposed to vibrations. The vibrations can in some cases have no consequences and in others result in critical failures of the component. Vibrations can result in deflection and increased stress levels which can lead to malfunction, decreased lifetime of a component or human discomfort [48]. The oscillation of a component can also be amplified. This occurs when the natural frequency of a component coincides with the frequency of an applied load. This results in a manyfold increase of the amplitude and also yield very high stress levels. These so called resonant frequencies are therefore critical as small periodic forces can result in large amplitude oscillations.

Vibrations can be divided into two categories. Vibrations in the frequency span 0-25 Hz is classified as tactile and visual vibrations and vibration in the span 25-20,00 Hz is classified as noise. Vibration in the span 0-25Hz is approximately the frequencies that a vehicle is exposed to that can be harmful[46]. The frequencies between 1-4 Hz are the result of the handling of the vehicle and the span from 4-25Hz is initiated by the road roughness[47]. Components and complete vehicles are tested both in a digital environment, in test rigs and tested on a test track to evaluate the result of vibrations in order to ensure that critical oscillation is not present.

When designing a component that will be mounted on a truck and thus exposed to vibration, the aspect of natural frequency must be taken into account. In order to avoid harmful oscillation the natural frequency of a component must therefore exceed 25Hz. The formula that determines the natural frequency of a component is presented in eq. (2.3)

$$f = \frac{1}{2\pi}\sqrt{\frac{k}{m}} \tag{2.3}$$

The natural frequency, f, can be increased by decreasing the mass, m, or increasing the stiffness, k.

When implementing components that are heavier than the components that have been mounted up until today, the result might be that the component has natural frequencies in the critical frequency span. In order to counteract this, and increase the natural frequency, one must increase the stiffness. For heavy components it might be impossible to increase the stiffness and maintain a natural frequency over 25Hz. The rear axle of a truck provides a great example of a heavy component that has a compromise between stiffness and natural frequency. The rear axle on a Volvo truck have a natural frequency around 13Hz and can therefore be excited by input from the road, without failure. As mentioned earlier, natural frequencies under 25Hz will not unconditionally lead to harmful oscillations. By mounting a component on rubber bushings the level of vibrations entering the component can be decreased. It is also important to avoid mounting two components with equal natural frequencies. If this is done, the components might start oscillating and drastically aggravate each others oscillations. Since the truck is a very complex and dynamic system it is not

simple to analyze how a component will affect and be effected by the system. In order to analyze the behaviour of a novel component and to ensure its lifespan, both FE-analyses and physical testing must be performed [47].

2.4.2.3 A vehicle dynamic multi-objective optimization

The vehicle dynamic theory presented in the previous sections describes a multitude of aspects present within the subject. In order to develop a feasible concept, all vehicle dynamic requirements must be met. Since for example, the aspect of natural frequencies requires a stiff solution while the working principle of the truck requires a weak solution the need of multi-objective optimization is obvious.

2.4.3 Collision safety

In addition to the loads occurring during normal operation, a truck must handle loads from a number of extreme abuse situations. Volvo is using standardized tests to cover possible abuse situation which might occur on the road[49][50]. These test are frontal collision, rear collisions, side impact from passenger car, cab impacts and rollover accident. To be able to evaluate ESS-pack concepts, frontal barrier collision and passenger car side impact have been chosen because these load cases will be the most critical when evaluating the mechanical integrity of an ESS-pack and its influence on the complete vehicle.

To understand collision safety for ESS-packs one must understand how the the SSV is designed to handle collisions. Frontal and rear impacts have been a major concerns in order to protect humans in the truck and in a colliding passenger car. When implementing Li-ion batteries in a truck, new safety aspects must be taken into account. In addition to protecting humans one must now protect the ESS-pack which is sensitive to deformation and penetration. In the case of front and rear collision this adds nothing major. The safety requirements remain the same and the current safety mechanism will be capable of protecting an ESS-pack.

For side impact protection the implementation of an ESS-packs results in elevated requirements for collision safety. The current SSV have diesel tanks mounted in between the rear and front wheel axles. Intuitively one can think that a fuel tank and an ESS-pack would generate similar requirement on collision safety, but that is not true. The major safety concern with diesel tanks is that diesel is flammable, which can result in fire and critical failure. In order to combust diesel, both heat and an igniter is needed and in a side impact collision the heat needed to combust the diesel is seldom sufficient. In addition to that, the diesel tank is designed to handle deformation in case of a side impact without the leakage of diesel. This further reduces the risk of a critical failure. The diesel tank is therefore insensitive to deformation and the risk of a critical failure is low.

If an ESS-pack is mounted in the same place as the current diesel tank, the safety requirements are changed dramatically. As described in section 2.3.3, dangers and failure modes, the ESS-pack is sensitive to deformation. This generates new requirements in order to be able to handle side impact collisions and to protect the mechanical integrity of the ESS-pack.

To protect an ESS-pack from deformation during side impact from a car, new solutions of mechanical protection is needed. To protect cyclist and pedestrians a side underrun protection is already implemented on the SSV. As seen in fig. 2.28 it consist of two aluminum rails that limits the possibility/risk of a pedestrian coming into the wheelbase area where the risk of being overrun is high. The side underrun protection is however not designed to absorb the load that results from a side impact by a car and cannot be used to protect an ESS. To guarantee safe packaging of an ESS between the front and rear axles of a truck, a new way to handle side impacts need to be developed.



Figure 2.28: Volvo truck side underrun protection

2.4.3.1 Energy Absorption Theory

In order to handle a side impacts, the kinetic energy of the impacting object must be dissipated. This can be achieved by energy absorbing structures and is described by Guoxing Lu and Tongxi Yu in the book *Energy Absorption of Structures and Materials*[51]. They describe that energy absorption can be achieved by various designs, but all designs have in common that kinetic energy is dissipated in a controlled manner or at a controlled rate. To enable an effective energy absorption, some fundamental principles must be fulfilled.

The energy conversion must be irreversible. The energy absorbed should be dissipated rather than initiate an elastic reaction in the component. The energy absorbing structure must have the ability to absorb the total energy applied as well as keeping the peak reaction force under a certain level. In order to do that, a sufficient amount of displacement displacement (i.e. stroke), must be enabled. This in order to absorb a constant amount of energy throughout the whole stroke. The force F, is dissipated over time (t). To be able to lower the peak reaction force, a longer stroke and thereby a longer time for the energy to be distributed is needed. In vehicle applications where the direction, velocity and geometry of the impacting object is unknown, it is of great importance that the deformation process and the energy-absorption capacity is reliable and repeatable in order to provide a robust solution. Also, in order to be feasible for vehicle application the energy absorption structure must be lightweight and offer high specific energy absorption capacity.

The car industry have applied and developed many effective energy absorption

structures. Two examples of energy absorbing structures will be analyzed in this section, namely structures for absorbing energy in frontal and side impact. To handle loads in the case of a frontal collision, a cross beam and a crush-box, marked in blue in fig. 2.29 is installed. This in order to distribute and absorb loads. The effective distribution of uncertain loads enabled by the crossbeam and long stroke enabled by the crush-box enables effective energy absorption. This structure can absorb a large total energy as well as keeping the peak reaction force low.

The other case is the side impact protection beam marked in yellow in fig. 2.30. It is mounted in the door of a car and is most often a steel beam. The beam is shaped like a W to increase the stiffness and energy absorption capabilities and have great similarities with the W-beams guardrails system that used for highway safety. A passenger within a car is seated just on the inside of the door, which limits the available stroke and thereby the energy absorbing ability of the structure. Due to the very limited stroke the function of the beam is to distribute load from the door to the chassis of the car. This structure can therefore distribute a large total energy but is less able to keep the peak reaction low.

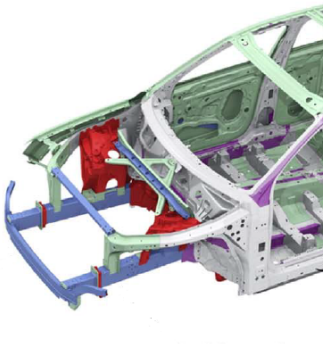


Figure 2.29: Frontal collision cross beam and a crush-box

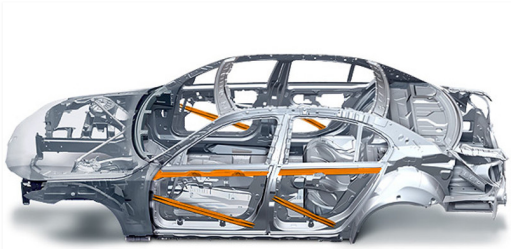


Figure 2.30: Side impact protection beams

In summary it can be concluded that an good energy absorbing structure must be able to distribute loads by displacement under time t. This to reduce the reaction force. To achieve sufficient protection of the ESS, the energy absorbing structure will require a certain designspace and thereby reduce the designspace for the actual ESS-pack. The example given with the side impact protection in a car is a good comparison since the deformation zone is limited and the object which is to be protected, must not be deformed or penetrated.

2.5 Mechanical aspects of ESS-Pack design

In section 2.3.3 danger and failure modes and section 2.4 Heavy duty truck technology, the requirements from the vehicle and the battery technology is presented. How these requirements can be meet by the ESS is presented in this section.

In fig. 2.31 and fig. 2.32 the internal structure of a generic ESS-pack presented. In this example, 18 battery modules are connected and supervised by the BMS. In between the battery-modules the cooling system is placed to dissipate the heat produced by the ESS-modules. On one side of the ESS-pack the BMS is located and enables power, data and cooling media interfaces. The internals of the ESS-pack is enclosures by the upper and lower housing.

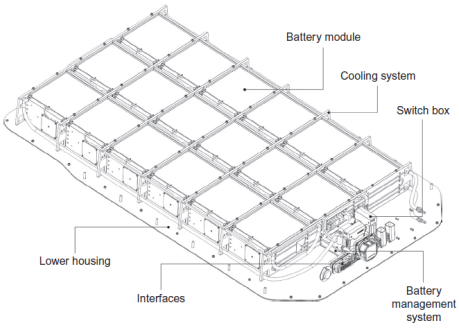


Figure 2.31: Internal structure of a generic ESS-pack[10]

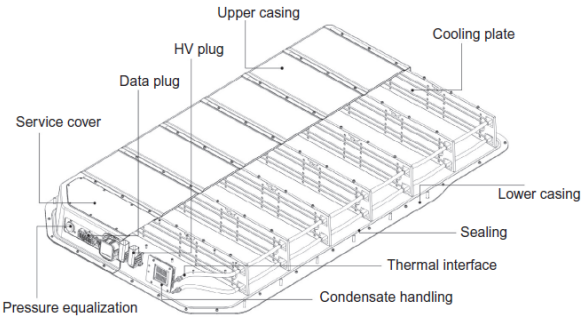


Figure 2.32: ESS-pack housing and structural reinforcement by cooling plates[10]

As mentioned earlier, the ESS-pack must have very specific mechanical properties. The mechanical requirements are mostly covered by the housing of the ESS-pack. The housing is generally made of metal or composite plate skins to prevent intrusion and provide a framework to give extra stiffness. The housing is interacting with the cooling plates and the housing of the battery-modules which contributes to the stiffness and the mechanical strength of the ESS-pack [24]. The mechanical properties of the ESS-pack are highly dependent on its location on the vehicle. The mechanical properties must be sufficient for driving in normal conditions as well as handling the forces produced by a crash. The ESS-pack must also meet the requirement from an IP-classification and be resistant to corrosion, fire, road debris, chemicals and intruding objects. The housing of the ESS-pack must also enable connection points to be able to mount the ESS-pack to the chassis of the vehicle.

As described in section 2.3.3.2, the ESS-pack must be able to handle a TR and prevent TR propagation. Thermal barriers can be implemented in multiple levels of the ESS-pack [52]. On the battery pack level, battery-modules can be assembled with cooling plates in between them in order to distribute heat. There can also be a firewall between the rows of battery-modules. Fig 2.33 shows an ESS-pack for a BEV where a firewall have been placed between two rows of battery-modules. This slot also enable room for cabling.

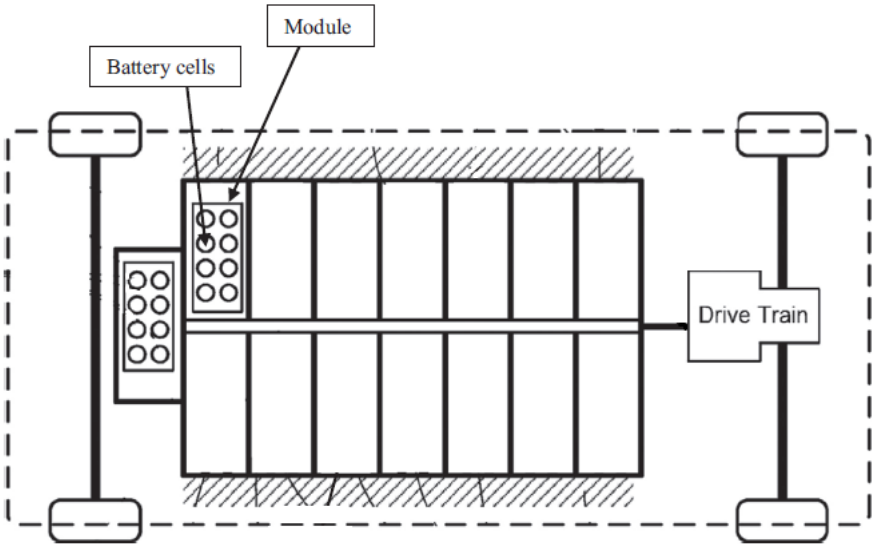


Figure 2.33: ESS-pack whith thermal barrier [52]

On the battery-module level it is important to prevent propagation of TR between cells. One way of doing this is to lower the thermal conductivity between cells. Fig. 2.34 shows a battery module consisting of cylindrical cells with thin spacers in between. The primary function of the spacer is to fix the cells in the module. The secondary function is to create air gaps to insulate cells from one another and thereby slow down or prevent the propagation of a TR.

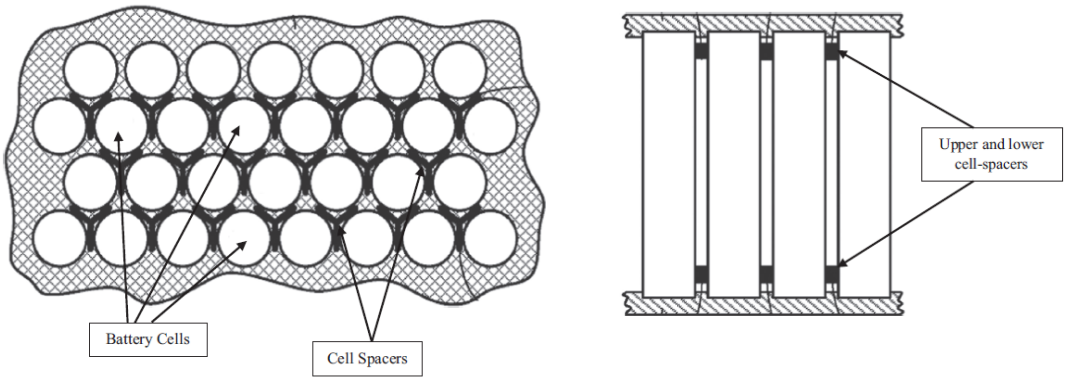


Figure 2.34: Cylindrical battery cells assembled with cell spacers[52]

3
Methodology

This chapter describes how and why the methods and theory presented in chapter 2 were implemented. The first sections describes the product development process that was used as a whole. The parts that follows each deal with a particular step within the process of this thesis and aims at describing the methods used within it.

3.1 The Product Development Process

The core development process that was used during this project was based on a model presented by Ulrich and Eppinger and described in section 2.1. However, since the project focused on a specific part of the product development process and was supposed to act as a pre-study for upcoming projects, the part of the Ulrich and Eppinger process that was of relevance was concept generation. This meant that the project could be divided into:

- Theoretical framework - containing the literature review
- Research and analysis - stating the customer needs and list of requirements
- Concept development - different concepts are created and analyzed
- Design optimization - a method is established for further evaluation of the concepts

Additionally, when it comes to the product development processes used during the project, parts of the Wheelwright and Clark methodology was also incorporated. This since much of the theory presented by Wheelwright and Clark overlaps with what is said by Ulrich and Eppinger. However, it is important to keep in mind that product development theory is very generic. This means that in order to utilize it in an applied way, some tweaks and changes to the methodology and processes incorporated within the theory has to be made. When it comes to this particular project, these tweaks and changes involved both the sources of needs and requirements mentioned above as well as changes made to the way concept development was structured. More about this is presented in section 3.4

3.2 Literature review

At the beginning of the project, a literature review was conducted. This in order to establish and compile a good foundation of knowledge related to electric vehicles, trucks and the components involved in these two areas. It also served the purpose of highlighting what areas would be of importance during the concept generation phase

as well as acted as a guiding force for the whole project. The methodology of the review can be summed up as follows. Information in the form of scientific articles, published books and journal articles were gathered - mainly through the Chalmers internet library database [53]. Articles written by popular culture outlets were also used, especially to get a sense of contemporary product announcements, presented by competing companies. This information was then analyzed and distributed to different folders with respect to its contents. The last step was to summarize this knowledge in written form.

Another source of information during the literature review and during the creation of the theory chapter was personal correspondence with people at Volvo. This correspondence was primarily limited to the group from which the project originated. This since the focus of the project was directed at issues were the expertise of this group were highly relevant. Thus, a continuous, informal correspondence was kept with people of interest in order to capture the internal knowledge within the company. The information that was obtained from these meetings were documented in text form, and then incorporated into the literature review. It is also worth noting that much of the applied knowledge that was related directly to the SSV could not have been obtained in a reasonable way by studying academic articles and/or talking with people involved within academia.

3.3 Research and Analysis

The research and analysis section of the project was conducted for several reasons. First of all, it enabled the establishment of the prerequisites for development of the product in question. This was done in order to understand if the project could be limited by the maturity of the whole technology and market sector that it is part of. The best way of establishing this is by evaluating the product on an S-curve graph. Secondly, the research and analysis phase enabled the understanding of who the customer of the product was and also how to extrapolate his/her needs and requirements.

3.3.1 S-curve and The Design Paradox

As stated previously, the S-curve method was used in order to understand where in the state of innovation of electric trucks the project was placed. This was done in part by benchmarking product offerings and announcements made by competitors, and in part by assessing the amount of articles and academic material being published about the technology related to the subject. By exploring what was being published, both within academia and within the market sector the rate of innovation and state of the art of a product could be determined. No formal way of compiling this information was used. The result is discussed and presented in section 4.1.

The S-curve method was paired with a discussion of the design paradox. This was done in order to make it clear how the project was influenced by the focus it had. The design paradox, as described in section 2.1.3, makes it understandable why a certain amount of progress can be made at different stages of the product

development. The stage at which this project was placed was determined by analyzing the level of abstraction that the concepts were going to have. Coupling this fact with discussions about the aim and purpose of the project with all stakeholders of the project made it possible to determine an overall maturity level of the project.

3.3.2 Competition Benchmarking

As a complement to the literature review a competition benchmark was performed. The players of the truck market was analyzed and articles written by popular culture outlets was used to quickly get a wide perspective of interesting products and innovations. In a later stage of the project products presented by competitors on the market and press releases was analyzed to immerse the knowledge in the subjects related to new aspects of the project.

3.3.3 List of requirements

When developing the list of requirements for a battery pack intended for use in a heavy duty electric truck there are aspects from multiple disciplines to take into account. Coupling this with the fact that the "customer" in the case of this project cannot be defined as the end user, but rather as various departments within Volvo, the methodology as desribed by Ulrich and Eppinger cannot be fully implemented. The list of requirement should, as described in section 2.1, reflect the latent and explicit needs as they are expressed by the customer. Upon reflecting on the intended customer for this project, it became clear that collecting these needs and requirements would have to be done in a more academic way than what is described by Ulrich and Eppinger. Instead of utilizing customer surveys and interviews it made more sense focusing on current legislation and standards regarding battery and vehicle technology as well as collecting previous requirements set by Volvo.

With this in mind, the collection of requirements was divided into different domains. These domains were set to reflect the different areas that have to set requirements on the battery pack in order for a mechanical solution to be possible. It is important to note that the list of requirements in the case of this project was not intended to capture the complete set of requirements on the battery pack, only the ones that were deemed relevant for mechanical design. In addition to this, a main focus of the list of requirements was safety. This since it had been established in the background study that keeping Li-ion batteries safe from exposure to mechanical harm would be a major issue in the future. Therefore the the following areas where established; mechanical safety, thermal safety, electrical safety, product architectural and packaging and manufacturing and assembly. This means that, for instance, the manufacturing requirements were gathered from information about the current assembly process as well as general knowledge about production. A plurality of the requirements within the safety categories were on the other hand collected from standards such as SAE. These standards in turn are based on parameters such as legislation.

This information was then analyzed with regards to how relevant it was. The requirements that were deemed relevant were put into the list of recommendations

that can be seen in appendix A.

3.4 Concept development

In the concept development phase, different aspects of the problem were analyzed. This meant exploring sub-problems, exploring the physical design space, generating concepts and evaluating the generated concepts. The last mentioned evaluation and concept generation process occurred in a very iterative way throughout the development. This meant dividing the different iteration stages into pieces, in order to get a sense of the linear progression of the project. The specific way this was done was through dividing them into a couple of phases, each of which represented a new iteration stage. More about what each phase contained is presented later.

3.4.1 Function Analysis

In order to get a good sense of how the requirements established in the list of requirements could be translated into functions, a functional analysis was performed. This analysis was done by dividing the main function of the ESS-pack into subfunctions, that were related to different sub-problems that it had to solve. These subfunctions were then divided into even more specific functions, related to even more specific sub-problems. The process of developing the functional analysis was iterated until a common view of the problem was developed by the group.

Division into sub-problems

In a simple component it is possible to handle all functions at the same time and design a component that fulfills all the requirements. However, when developing a more complex component or product it is not practical to handle every constraint and find solutions to all sub-problems simultaneously. It could also be concluded that the sub-functions within this project was highly coupled, which made it even more difficult to isolate a sub-function and find a solution for that sub-function alone.

In discussion with the supervisors and persons with experience of implementation of ESS-pack on vehicles at Volvo it could be concluded that some sub-functions would be more important and critical than others. These would therefore have to be solved first in order to ensure that the resulting concept would be feasible at all. A person responsible for simulation at Volvo explained that several projects similar to this thesis had tried to have a very wide focus at the beginning of their projects. This person believe that, if all dimension of the problem are incorporated at the same time, it results in the project failing [47]. It was therefore necessary to isolate the crucial aspects of the product and focus on them at the start of the project.

3.4.2 Concretization of Designspace

The concept development also required defining a design space. This space constituted the areas of the truck in which ESS-packs concepts could be mounted. It was

therefore important to first take into account the delimitations that had been set at the beginning of the project, i.e. the areas that were excluded from development due to the scope of the project. Secondly it was of importance to incorporate the functions established in the functional analysis and make sure that these could be implemented. The functions that could not be included in the concept development due to time constraints still had to accounted for within the design space.

ESS-pack calculations

As described in section 2.3.4, Li-ion ESS-packs can be scalable to fit their intended application. This means that, given the right circumstances, the overall shape of an ESS-pack is possible to influence as a company ordering ESS-packs from a supplier. However, in order to be able to generate concepts during this project, some assumptions had to be made as to the characteristics of the ESS-packs. Thus, based on confidential information from a current supplier of ESS-packs, a packaging efficiency and material density was calculated. This was to be used as prerequisites for concept generation. Since the information used during these calculations was confidential, it is unfortunately not possible to disclose the exact numbers used. What can be disclosed however is the general methodology that was used.

The outer dimensions of the ESS-pack as well as the number of modules that it contained was know. This made it possible to calculate a volume, both for the ESS-pack and the battery modules. Then, by dividing the volume of the ESS-pack with the total volume of all battery modules, a packing density could be obtained. This density was of course not entirely accurate, but it gave a sense of how tightly the battery modules could be packed into a given volume. In other words, the excess space needed for ancillary equipment such as cooling pipes and wiring that is supporting the battery modules could be estimated. Furthermore, since the weight of the ESS-pack was also known, a rough density estimate could also be calculated. This density was of course not entirely accurate either. This since, the division of the weight of the ESS-pack with the volume of the ESS-pack calculated a density that assumed the geometry to be a homogeneous solid, which was not the case. The assumption however was that, given that everything from the dimensions of the battery modules to the chemistry of each individual cell in the battery pack could be specified by the ordering company, a volume of arbitrary dimensions could be filled with as many battery modules as technically possible. Coupling this with the assumption that the same packing efficiency that had been calculated previously would also apply to this arbitrary volume, the general characteristics of such an ESS-pack shape could be estimated. In conclusion, the assumption was made that the ESS-packs could have an arbitrary shape so long as they were cubical with relatively incomplex outer geometry.

3.4.3 Phase one

The concepts created in this initial concept phase were first meant to be analyzed and evaluated using engineering intuition. This with the hope of comparing the concepts with each other, without having to use simulation-models. However, due to the complexity of the problem and the amount of factors that would affect the

concepts, it was necessary to conduct some sort of FE-simulation. This to be able to determine how the ESS-pack affected the frame and complete vehicle and vice versa.

To be able to evaluate concepts in a digital environment a FE static simulation model was created in the software Creo. Chassis components from the SSV was imported and assembled with rigid links to form a chassis model. The model consisted of two frames, two cross beams, parts of the front and rear suspension and parts of the engine mounts. The finished Creo model can be seen in fig. 3.1. To be able to perform FE-analyses, Volvo have developed simplified dynamic and static standard load cases which corresponds to the loads that are applied to a truck during normal driving conditions. These static standard load cases was used during the upcoming FE-simulation. Volvo is using five standard load cases when evaluating early designs. The load cases are a torsional load case simulating one wheel hitting a curb, a cornering load case simulating a truck driving in a corner, a brake load case simulating braking, a tilt load case and a vertical load case of 1 g.

Since the chassis is designed torsional weak and the ESS-pack is sensitive to deformation and torsion the most critical standard load case was determined to be the torsional load case, simulating a truck driving on a rough road or hitting a curb. In the torsional load case, two opposing loads are applied to the front wheels and the rear wheels are fully restrained creating a twist. The load case can bee seen in fig. 3.1.

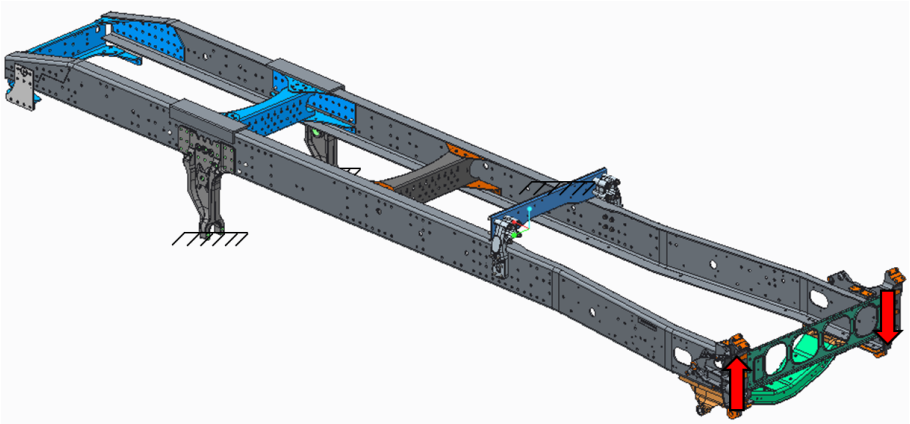


Figure 3.1: Chassis with applied torsion load case

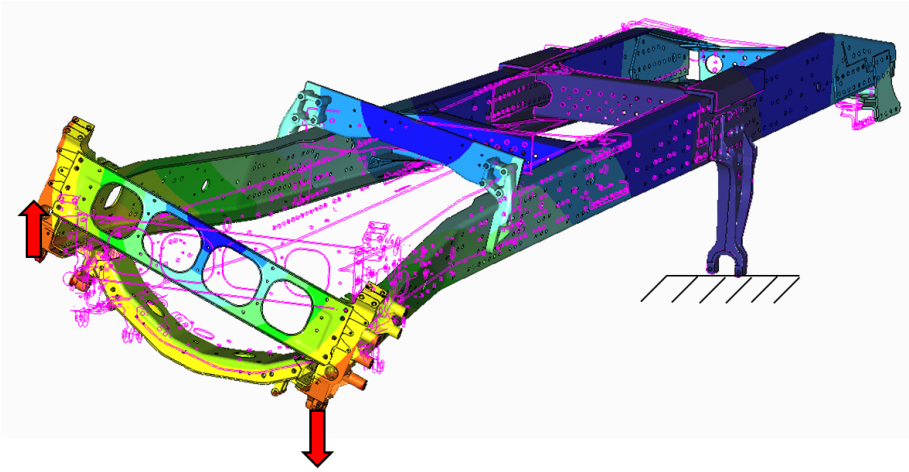


Figure 3.2: Chassis with applied torsion load case

To verify the accuracy of the Creo model the results of the chassis model with applied standard load cases was compared to a more sophisticated model used by Volvo. Stress and displacement was compared to validate the accuracy of the Creo model. Together with a person responsible for simulations at Volvo it was concluded that the model was good enough in the area where the ESS-pack would to be mounted and that the model could be used to evaluate the upcoming concepts.

The four concepts were modeled as thin walled boxes with a correct density and with an unit-stiffness. This to be able to compare concepts to each other. The boxes were assembled to the chassis with idealized springs with the translational stiffness 1000 N/mm in all directions. The attachment between the frame and one side of a box can be seen in fig. 3.3 and an overview of the 4 concepts and its attachment can be seen in fig. 3.4 .

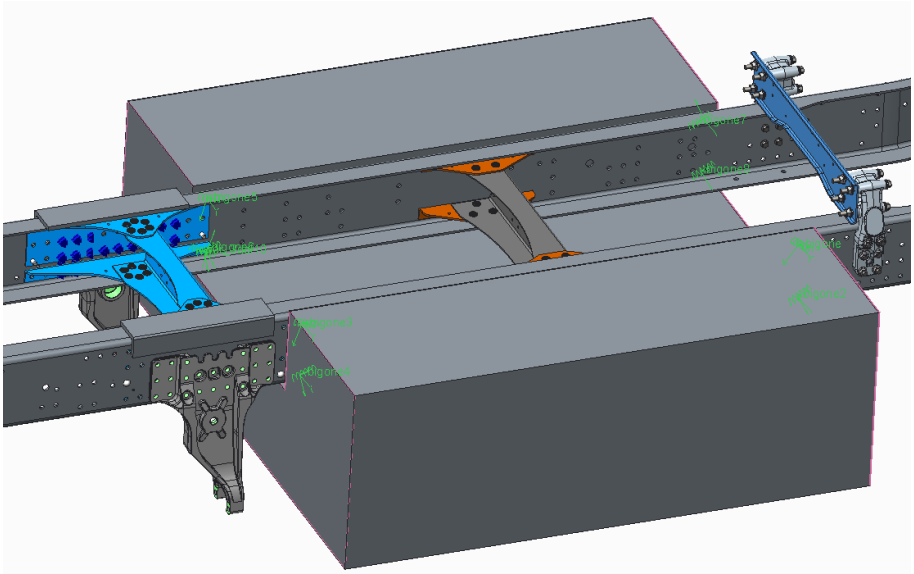


Figure 3.3: Spring attachment between frame and ESS-pack

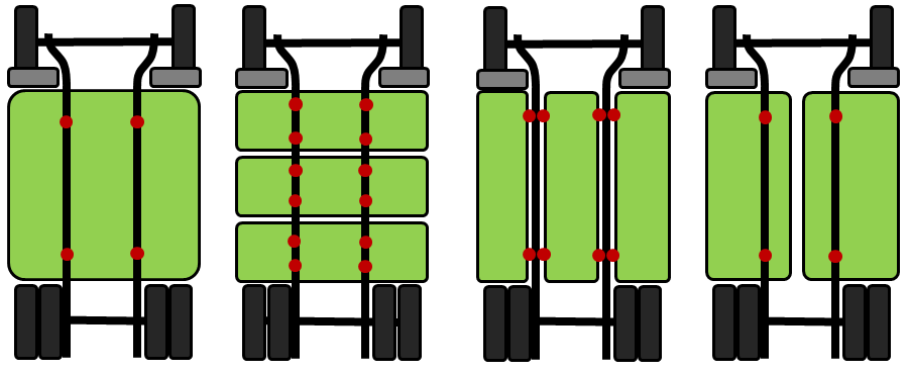


Figure 3.4: Attachment between frames and ESS-packs for the four concepts

Since the frame of the SSV was reused it was important to retain the mechanical behaviour of the frame. This meant evaluating if a concept was influencing the chassis. In order to evaluate the influence of a concept on the chassis, stress and displacement levels of the empty chassis was compared to chassis with the concepts mounted. In a simulation where the displacement and stress levels of the frame with the concept mounted were similar to the empty frame, it could be concluded that the concept did not affect the main functionality of the chassis. When the analysis of the result was done, the concepts were divided into two groups depending on how the concept influenced the chassis. The most promising concept from each group was chosen to be further evaluated.

3.4.4 Phase two

Although the torsional load was considered to be the most critical it was necessary to evaluate each concept with more standard loads in order to ensure their feasibility. Each of the concepts had different weaknesses and therefore different load cases were added to different concepts to further evaluate their feasibility. Together with the person responsible for simulations at Volvo, it was concluded that a load case with a 1g gravitational force would help to further evaluate the concepts. The concepts were then further developed to handle the new load case based on the results of phase one and ideas generated through benchmarking.

3.5 Multi-objective Optimization

The knowledge gained in the concept generation phase formed the basis for the design optimization. In order to further increase the knowledge in how to design an ESS-pack and eventually find an optimal design for an ESS-pack, a model of the ESS-pack was created. The process of creating this model was iterative in order to ensure that the optimization based on the model could answer the questions stated.

The formulation and initial problem statement was of highest importance to ensure high quality of the optimization output[7]. Since the first step of an optimization study is to define what problem is to be solved as well as which objectives that are to be maximized or minimized, this was done first. When performing the first

iteration of an optimization it is possible that an obvious or ambiguous objective is missing. When the result turns out in an unexpected way it might be because of a missing objective. The missing objective must then be implemented and a new iteration can be performed.

If more than one objective exist, it must be decided how the multi-objective optimization (MOO) can be translated into a single objective optimization in order to find an optimal solution. This can be done by treating all objectives but one as constraints or by weighting the objectives. Wherever it is possible it is advantageous to convert an objective to a constraint. For an objective to minimize stress it is thereby reasonable to translate it to a constraint that defines a maximum allowed stress since it reduces the complexity of the optimization and the fact minimizing a stress level may not result in the optimal design. When weighting objectives the mutually importance is defined which results in one optimal solution.

The quantities that defines the problem must be divided into those that can be varied and those that are parameters. For each variable a constraint must be defined. Lower and upper bound for all variables will together define the design space where an optimal solution for the problem can be found.

For large and complex problems the number of input parameters increases which can result in difficulties. The FE-model and the optimization software can handle very large and complex problems, only the calculation time will increase. The problem with large and complex problems are to formulate them in a way such that the objectives reflect what is a "good design". Even problems that are less complex to define may cause difficulties. The result for a problem with a lot of variables may be hard to understand and interpret. A rule of thumb is therefore to not use more than 10 variables[54].

An optimization study often requires multiple iterations. If the problem is large the complexity is increased when the number of variables are increased. If an optimization study becomes to complex, an optimum might be difficult to locate and the result might be impossible to interpret. Increased complexity of an optimization study can be handled in at least two ways. First, by doing a screening where all variables are varied to identify which parameters affects the performance the most. Secondly by using a correlation matrix, the variables which are affecting the performance the most can be identified. Variables that do not affect the performance can be converted to a constant with a fixed value. By reducing the number of variables the complexity of the optimization model is reduced. Another way of reducing the complexity is to focus on a sub-problem of the optimization problem. A smaller amount of variables can be varied, this in order to reduce the complexity and to increase the probability to generate a good result.

To create the FE-model needed for the optimization study the pre-processor ANSA was used. The optimization software used for the optimization study was modeFRONTIER. Since the method of the optimization is based on the result presented in chapter 5 the method used for optimization in this project is further described in chapter 6.

4
Research and Analysis

In a project, it is important to have a solid foundation that act as a base for the decision making that takes place. This foundation can for instance be insights into were the project finds itself within the larger development of the industry, how the project competitors are solving the same problem or what is necessary to take into consideration when generating concepts. This chapter contains some of the research and analysis that makes up this foundation. It covers for instance: the project maturity, an electric vehicle competitor benchmark and the development and presentation of the list of requirements.

4.1 Project Maturity

The reasons why it is important to have the design paradox and S-curves in mind when developing an ESS-packaging solution for a fully electric heavy duty truck are twofold. The first relates to the S-curve. Relatively little is known about the effects that electrification has when applied to a truck. The market of truck electrification is still in its infancy, and is thus at the beginning of the S-curve. This can be seen in part by the number of product announcements made by truck companies that alludes the release of a first generation electric truck. When coupling this fact with the fact that this project is placed early in the development process some problems arise. This is because, even though we have the ability to change a lot, there is little known about what is important when it comes to truck electrification and thus it is hard to know which parameters will influence the outcome the most. This fact has implication in everything from the problem formulation to specifying requirements and coming up with concepts. Take the specification of requirements regarding maintenance and serviceability as an example. If there is no precedent setting the expectations on how to maintain and service an electric truck, it requires a lot of time and resources in order to acquire that knowledge. At the same time maintenance requirements must be included early in the product development process no matter how little is known about it. Thus, since this particular project is based at the early stages of product development, the detail level in all areas will be set accordingly.

4.2 Competitor benchmark

Companies all over the world are currently developing fully electric trucks. Concepts and future products are being presented, "wish and wonder" performance are vague substantiated and technical details are consciously missing. For a product in the

early stage of the S-curve information is kept inside the company to protects its position on the market.

A benchmark for fully electric trucks was conducted and the result is presented in the upcoming sections.

4.2.1 Mercedes-Benz eActros

Mercedes-Benz are developing a fully electric rigid truck for heavy duty distribution[55]. It is a Li-ion based ESS solution with the capacity of 240 kWh with the motors located in the rear axle. The eActros is based on ICE version of the same truck and re-suses the conventional longitudinal c-beam chassis. The truck will be rolled out to customers during 2018.

Mercedes have presented pictures reveling the architecture and the mounting of the ESS-pack, which can be seen in fig. 4.1. The 11 high voltage batteries are assembled in three ESS-modules. One is mounted in between the longitudinal beams and two are mounted under the longitudinal beam in between the wheel axles. Each of these ESS-packs are mounted with three rubber bushings marked with red dots in the figure. Rubber bushings are probably used to decouple the ESS-pack from the frame in order to hinder the ESS-pack from adding stiffness to the chassis and to decrease the level of vibrations in the ESS-pack. Three point are probably used to decrease the stiffness added to the chassis since it is a well known practise used for engine mounts in a broad range of ICE vehicles. The eActros truck and the SSV shares the same type of chassis and the design and mountings of the ESS-pack used on the eActros can be used as a reference in the upcoming concept generation and FE-analysis. To protect the ESS-pack in case of a collision a steel housing is covering the ESS-packs and can be seen in fig. 4.2. The steel housing allows deformation in order to absorb and distribute energy.

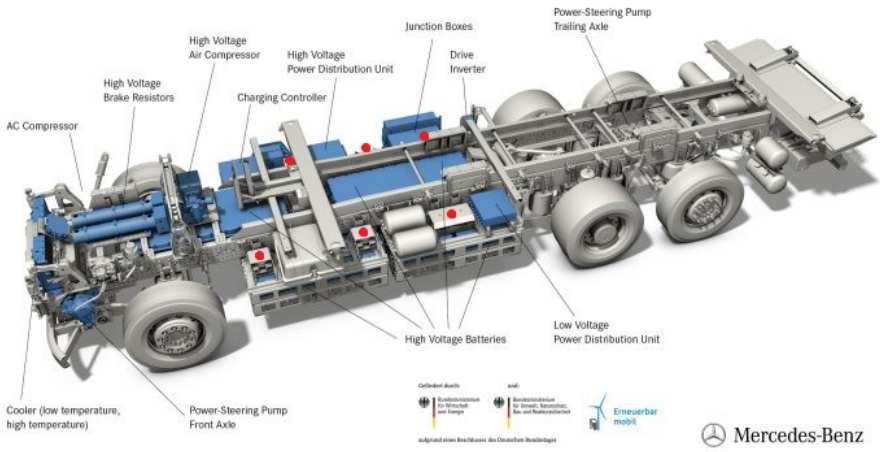


Figure 4.1: Mercedes-Benz eActros[55]

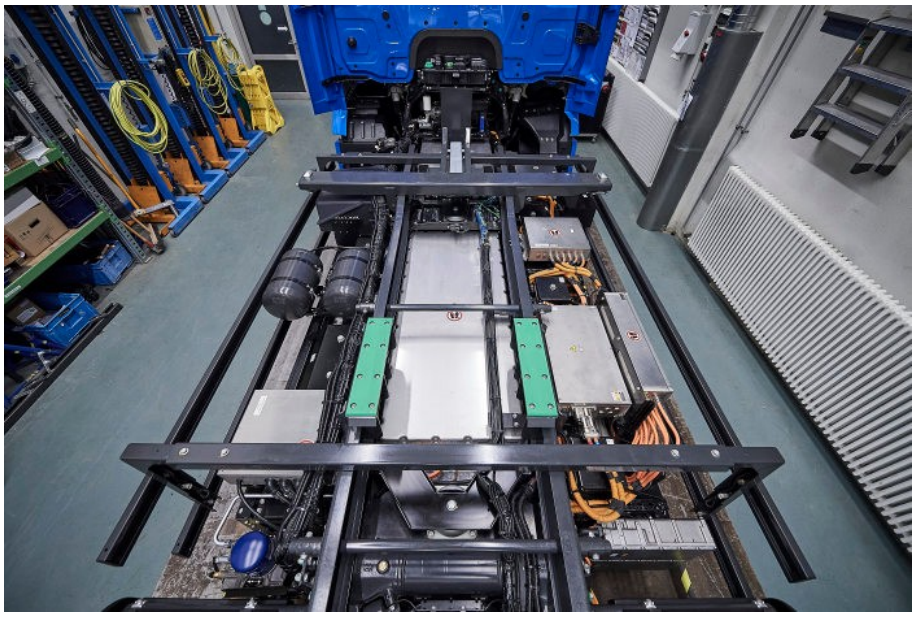


Figure 4.2: Mercedes-Benz eActros[55]

4.2.2 Tesla Semi

Tesla has revealed a fully electric 6x4 tractor. Information about the capacity or the battery technology used have not been presented. Since other BEV presented by Tesla are using Li-ion based ESS it is probable that a Li-ion based ESS solution is to be used for the Tesla Semi. The motors are placed in the rear axles of the truck and can be seen in fig. 4.3. The chassis is developed for battery electric propulsion only and is therefore developed with the requirements of an ESS-pack in mind. Just like the platform for the Tesla personal cars the ESS-pack act as a structural member of the chassis. Since the structure of the load bearing chassis of the Tesla Semi and the SSV have very few similarities there are no obvious ideas to implement in this project.

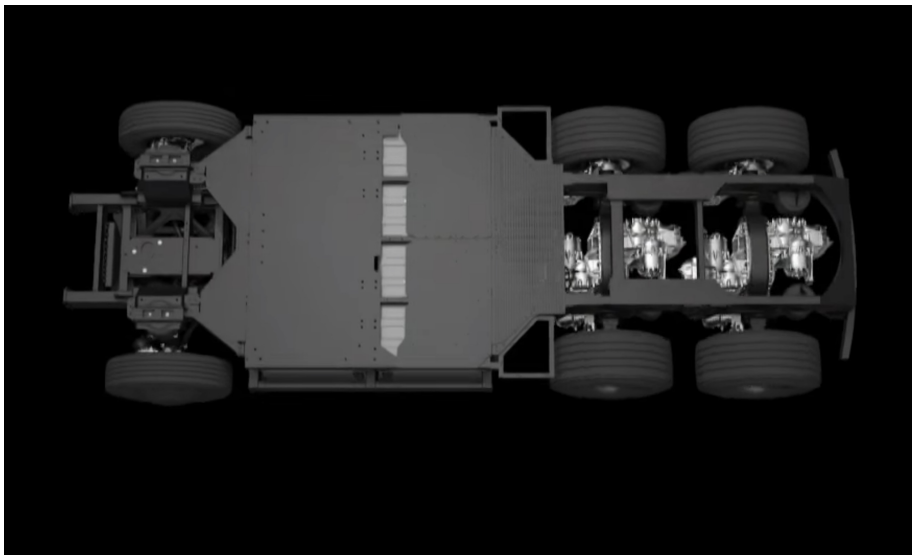


Figure 4.3: Tesla Semi[56]

4.3 Development of list of requirements

In order to develop a list of requirements it is important to understand all different aspects of a product. These aspects are usually the responsibility of different stakeholders, both inside and outside of the company making the product. A stakeholder has the responsibility of a specific part of the product, where a specific set of requirements apply. The supplier of a component within a product have requirements set, both with respect to what the product demands and with respect to the physical characteristics of their component. Take a battery of a mobile phone as an example. The manufacturer of the battery have safety requirement set by the mobile manufacturer. However, they also have safety requirement set by the battery technology that they use. Thus, the battery manufacturer have both (what will be called in this project) external and internal requirements. Fig. 4.4 is helpful in trying to understand this concept. The figure is based on the basic architecture of an ESS-pack. From the left in the figure, the inner structure of the battery cell have certain requirements, for instance with respect to thermal management. These requirements have to be met by the battery module which in turn transfers requirements to the ESS-module and so on. From the right there are external requirements, collision impact requirements for instance. These have to be met by the ESS-pack which in turn puts requirements based on these external requirements on the ESS modules and so on.

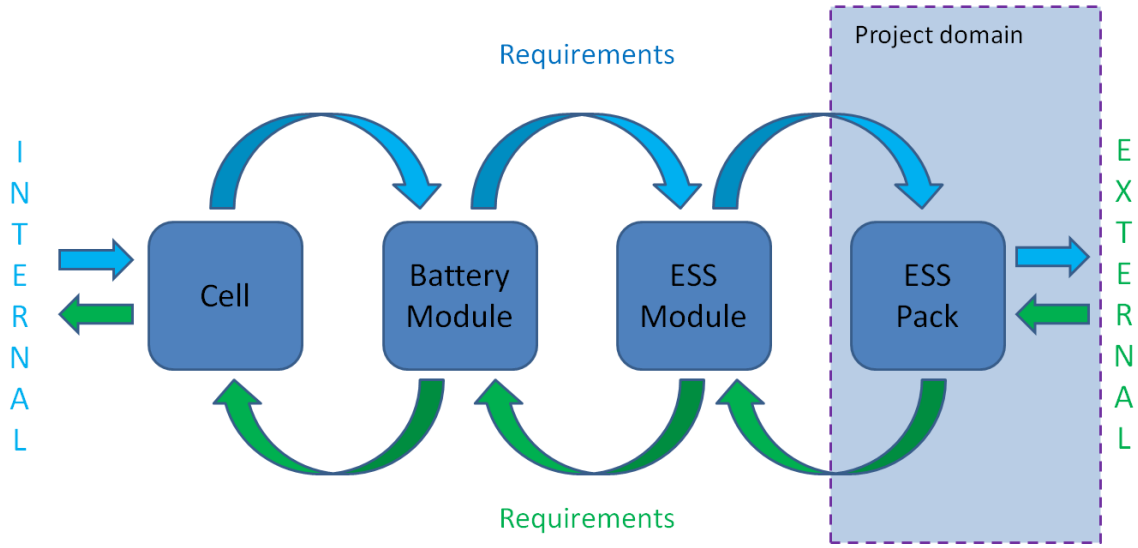


Figure 4.4: Conceptual explanation of internal and external requirements

The ESS-pack of an electrical vehicle is a complex and multidisciplinary product which combines elements from multiple fields of technology. The different functions of the ESS-pack, described in fig. 5.1 and the different levels of components included in the ESS-pack, generates a list of requirements to be implemented by the ESS-pack. These requirements can be divided into mechanical safety, thermal safety, electrical safety, working condition impacts and maintenance aspects.

In a complex product it is not always obvious as to which component or on which level a requirement is addressed. The phenomenon of TR can help to illustrate this ambiguity. TR can originate on the battery cell level and then propagate to battery module, ESS-module and ESS-pack level. The requirement to prohibit propagation of TR is therefore addressed at both battery cell, battery module, ESS-module and ESS-pack level. This means that the requirement originated from a TR in the electrical domain generates a requirement in the mechanical domain on the ESS-pack level. Thus, despite the fact that this project operate in the mechanical domain of the ESS-pack, requirements originated in other domains need to be taken into consideration.

As described in section 2.3.4 an ESS will be developed in cooperation with a supplier. It will be stated how and in which conditions the ESS can be used so that the supplier can guarantee safe and efficient use of their product. In this project that requirement is not stated and the requirement will therefore be based on the nature of battery technology rather on a specific ESS.

In the following sections requirements that are likely to have implications within the mechanical domain are stated and divided by their respective originating domain. The requirements in each domain is thereafter analyzed to determine if they have the potential to be addressed and solved by the upcoming concept generated in this project.

4.3.1 Mechanical safety

To achieve a feasible range when implementing electric propulsion in a HD truck, a certain volume of batteries is needed. This whilst the available space to store these batteries on the truck is being limited. This results in the necessity to place batteries in areas which have not been used to store components sensitive for deformation and penetration previously. As described in section section 2.3.3, Li-ion batteries are sensitive to deformation and penetration, since it could cause the batteries to short circuit and eventually induce a TR. Short circuits can be caused by for example deformations and/or penetrations, and therefore no deformation or penetration of the ESS-pack can be allowed. There are suppliers that guaranties that their ESS-solutions can allow for small scale deformation, without resulting in failure and malfunction of the battery. If deformation of the ESS-pack would occur, secondary risks are introduced. The casing of a deformed ESS-pack could potentially loose its ability to protect its content for example from water, which could lead to short circuit and TR. An ESS-pack should therefore be designed to minimize the risk of a liquid to enter the ESS-pack in case of deformation of ESS.

Another important factor to point out when talking about mechanical deformation of ESS-packs is the difference between a truck chassis and a car chassis. A truck chassis is, as mentioned in in section 2.4.2.1, made to enable a certain degree of torsion within the chassis frame. This is done in order to offload the suspension when the vehicle is traversing ruff terrain. The chassis of most cars on the other hand is not built in this way, which means that the mechanical requirements for an ESS-pack built for an electric car differs from the ones for an ESS-pack built for a truck. The ESS-packs that are produced today are sensitive towards torsion, meaning more specifically that an ESS-pack that is implemented into a heavy duty fully electric truck must be shielded from the torsion that is occurring within the truck chassis mentioned above. It is not easy to define a concrete value of how much torsional deformation that an ESS-pack can endure, which means that it will be of most importance to minimize it as much as possible when developing an ESS-pack concept.

An ESS-pack concept must, of course, endure the loads caused by normal driving conditions. To be able to evaluate a design of a component or concept the loads caused by normal driving has been analyzed by Volvo and translated to Power spectral density (PSD). PSD is a way to describe random vibrations and can be used to test a component or concept in a digital environment. Volvo have developed PSD curves for all driving conditions where a Volvo truck is used. The PSD levels will be confidentially handled in this report. As described in section section 2.4.2.2, mounting of heavy components aggravate the phenomenon of natural vibrations and resonance. A truck driving on a road generates vibrations in different frequencies. The ICE generates vibration in one frequency span and the input from the road thought the suspension of the car generates vibrations in another frequency span. A concept must therefore be able to handle the vibrations from normal use and the components of the concept must be designed in order to avoid resonance and excitation.

SAE standard J2289, Electric-drive battery pack system[57], defines mechanical guidelines when implementing the technology. In case of a frontal collision, an

ESS-pack with a large mass will generate large forces, which in turn generate high demands on the fastenings. J2289 state that the restraints should retain the orientation and position of the ESS-pack during normal operation and/or in case of a crash event. Small displacement of ESS is however inevitable. This is a factor that must be incorporated when designing the routing of HV cables and cooling tubes.

4.3.2 Electrical safety

HV electronics are by definition harmful to humans. This implies that sufficient safety systems are needed when implementing HVTS in a truck. Safety requirements originating from the electrical domain are mostly addressed to the BMS as described in section 2.2.2.1. These requirements thereby stays within the electrical domain and are hence outside the scope of this project. Two examples of such requirements are to handle energy from regenerative breaking and preventing overcharging of a cell. These functions are not incorporated in the scope of this project.

Some requirements originating from the electrical domain can be addressed to the project domain. Since HV electricity is harmful to humans, all HV components must be inaccessible for uncertified personnel. Also the HVTS needs to be electrically isolated from the chassis to protect from harmful voltage in case of electrical failure. The ESS-pack will furthermore be exposed to water through rain and abrasives from road debris. Therefore, cables and connections needs to be protected from wear. Additionally, ambient environmental conditions will change during operation of the vehicle which will lead to condensation[24]. Therefore the ESS-pack must be able to handle condensate. In case of leakage of cooling media, the ESS-pack must be designed in such a way that short circuit is avoided.

In order to enable safe working conditions for emergency personnel some cautions need to be taken. Emergency personnel must be able to readily identify and de-energize the high voltage system without removal of any panels or use of special tools. A De-energize switch is recommended to be placed on top or side of ESS-pack. The De-energize switch must be accessible if the truck has rolled over to its roof or side. A recommended practice is therefor to have at least two means of De-energizing switches or functions.

All of the requirements mentioned in this section originate from SAE J2289 [57], J1673[58], J2910 and J2344[59] which covers guidelines and for electrical safety and HV wiring for EV.

4.3.3 Thermal safety

Thermal safety within an ESS-pack is, as mentioned in section 2.3.3, very closely related to the phenomenon of thermal runaway. It is of out most importance to protect people, vehicles and other structures in close proximity to the battery pack in case of a TR [33]. With this in mind it is logical that most of the thermal safety requirements on an ESS-pack relates both to how to prevent a TR from happening and what is allowed to happen if one is initiated. However, as mentioned in the introduction to this chapter, the requirements on an ESS-pack occur on several different levels. The core problem with TR initiation is something that

occur on a cell level. Nonetheless, due to the coupled nature of the levels within an ESS-pack there has to be TR related requirements on the highest level of the ESS-pack as well. It is reasonable for instance to have requirements related to the encapsulation of a TR event within the casing of the ESS-pack. The standard SAE J2464 also state that no propagation should occur between the ESS-modules. SAE J2464 furthermore addresses the ambient temperature, i.e. the temperature of the environment surrounding the ESS-pack [60]. According this standard the functionality of the ESS-pack should not be affected by temperature cycling between -40 and +70 degrees Celsius [61].

Another aspect of requirements on ESS-packs is what happens if a component within the HVTS that is linked with the safety of the system suddenly becomes non-functional. This type of single point failure could for example be caused by the cooling system ceasing to provide sufficient cooling to the components within the HVTS. In this case, as stated in the standard SAE J2910, "The high voltage system shall be demonstrated to not be damaged in the event of the loss or failure of any component or system cooling means" [62]. This is of course also applicable to the ESS-pack.

Last but not least it is important to yet again underline the importance of requirements on the ESS-pack regarding thermal events and damages to the surrounding environment. Thus it is reasonable to formulate requirement such that any critical thermal failure of ESS-pack cannot affect the safety of the driver or people in the near vacinity of the vehicle. However, it is also important to have a specific requirement about the ability of the ESS-pack to vent gases in case of critical failure. This since increased internal pressure also contribute to an increased danger for people in the vacinity of the vehicle.

4.3.4 Architectural and Packaging Requirements

Without requirements on packaging it is a simple task to enable an ESS-pack design with a large capacity. In a concept phase where the freedom of design is large and the knowledge is small it is difficult and with great uncertainty to define requirements. The largest part of the requirements on packaging is set by the SSV and are further discussed and described in section 2.4.1

In addition to the SSV, the technology which is to be implemented generates requirements. Due to the sensitivity of Li-ion batteries the ESS-pack cannot be mounted in such a way that plastic deformation, bending or warping occurs during regular use. The requirements that no deformation of the ESS module is allowed, described in section 4.3.1, indicates that the ESS-module can be problematic to place in areas where significant deformation is expected. To enable mounting of the ESS-pack where the diesel tanks have been mounted previously on the SSV, new protective mechanisms needs to be considered. As mentioned in section earlier the Li-ion cells and modules are sensitive to deformation, warping and bending. To ensure that the specified capacity and the safety functions of the ESS-pack is maintained the pack needs be packed and mounded to avoid deformation, warping or bending of modules during regular use. In a situation were there is deformation of the ESS-pack, the design should minimize the risk of fluid entering the ESS-pack

and thus inhibiting causing a short circuit. Additionally, the ESS-pack should be designed in a way that fluids cannot be contained by and/or stored on the surface of the ESS-pack. Finally, to enable assembly of the ESS-pack and also the electrical connection to the vehicle, there must be sufficient space for connectors, wiring and cooling tubes. SAE standard J1673[58] states guidelines for HV installations in electric vehicles.

4.3.5 Environmental working conditions

Both the working conditions and the ESS-module generates requirement on the ESS-pack. The capacity of a battery cell is influenced by the ambient temperature. To be able to reach the stated capacity a certain cell temperature is needed. This can generate problems in cold climate applications. During use heat is generated i the cell which eases the problem. The suppliers of ESS and ESS-modules defines a temperature span in which their product can be used. Most suppliers states that their products can be used in temperate as low as -25 degrees Celsius [36] [37]. As for now, the low temperate problem while driving is thereby addressed by the supplier. If the temperate of the intended working condition is lower than stated by the supplier either the supplier or Volvo can enable a solution by adding insulation.

When cold starting a vehicle the problem is more severe. To enable acceptable temperature the cooling system can be used inverted to distribute heat to the cells. To minimize the need for pre-heating sufficient insulation of the ESS module is needed. This function is today addressed by the suppliers but could be addressed to the design of the ESS-pack. In order to reduce the complexity of this project the function of insulation of ESS modules is addressed to the suppliers of ESS modules and is not included in the requirements.

The ESS-pack and its components need to be resistant to the environment and the substances present in the environment. SAE standard J2289, Electric-drive battery pack system states functional guidelines when implementing the technology. SAE J2464 states that it is desired to seal an ESS-pack from liquids and dust and states that the IP class IP6K9K rating normally is applied in automotive applications. IP6K9K means that a component need to be dust tight and protected against high pressure or steam jet cleaning [63].

4.3.6 Maintenance and serviceability

When replacing the ICE with HVTS requirement on maintenance and serviceability is fundamentally changed. The management of the batteries of a ESS is fully monitored by the BMS. This implies that no sign of misbehaviour needs or can be detected by visual inspection.

As a result of the fact that ESS-module has a limited life-span there is a requirement to be able to replace ESS modules. For EV in general it i stated that the capacity and the range of the vehicle should not be significantly reduce in eight years [10]. For electric trucks there are no such information available, neither from an external or Volvo source. There are also a lack of information regarding service interval or service strategies. The only adoption that can be made is that there will

be a need to replace battery modules. The design of the ESS-pack should enable easy installation and removal should therefor be verified during design of the ESS-pack.

4.3.7 Manufacturing and assembly

As was discussed in section 4.1, the stage at which this project is placed within product development makes it hard to concretize some aspects of the product. One of these aspects is manufacturing. Since the manufacturing strategy of a product is highly dependent on for example geometry and material of the components included within the product[3], it is usually easier to include it at lower levels of abstraction. Regardless, it is important to try and think about ways that manufacturing aspects can be included also early in the process in order to not produce concepts that are impossible to manufacture.

With this in mind, it can be beneficial to look at what scale of production the product is intended for. Many automotive products are intended for series production, which means specialized manufacturing tools and methods. This in turn brings a high initial investment cost in order for production to begin. In general it can also be said that the range of different models produced within an automotive product family is rather limited. There can be many different models, but the ways that they are differentiated are usually through means of accessories, engine choices etc. This means that the core of the car or truck is usually the same [64]. Assuming that the end concept of this project will end up being mass produced, general requirements regarding component geometry and material can be set. This means that both the geometry and the material of all included components must be designed/selected with mass production in mind.

In addition to general manufacturing requirement there are Volvo specific requirements. These are requirement originating from manufacturing and assembly methods used in the production. Volvo is using a main line where a truck assembled from a set of frames to a complete vehicle in approximately 7 hours. The line is divided into approximately 70 different stations, where a set of components and sub assemblies are mounted in a fixed timeslot. It is therefor of highest importance that all 70 stations is working properly since if one station needs extra time the whole line needs to be stopped. To increase productability on each station there are assembly lines that provides the sub assemblies that are to be mounted in the main line. For sub assemblies heavier than 7 kg tools for lifting the component is used. For these components "hook-and-hang" is required. This meas that the sub assembly should be properly placed so that fasteners easily can be used. The ICE is a good example when describing the "hook-and-hang" technique. The ICE is lifted into the chassis and place on engine mounts where it can stand by itself. The ICE is thereafter fastened with bolts. Hook-and-hang is used to enable simple and reliable assembling in order to meet the demands from a production perspective.

In an assembly perspective an ESS-pack have certain requirements. The ESS-pack will most certainly be pre-assembled in an assembly line. In order to reduce the assembly steps in the main line ESS-modules will be assembled to an ESS-pack and cables will be routed in the pre-assembly. The pre-assembly procedure is more

flexible and can to a large extend be designed in a way that fits the sub-assembly. The main line procedure is more constrained and these requirement must be taken into consideration in the early concept generation phase. When an ESS-pack is to be assembled the frame will most likely be oriented as it is on a complete vehicle. The ESS-pack must therefore be lifted up to the frame or the frame needs to be submerged onto the ESS-pack. Depending on the concepts developed later on the concept must enable a practicable assembly procedure whether it is a hook-and-hang solution or a solution which requires a more complex lifting solution.

In addition to the designspace introduced in section 2.4 some extra geometrical requirements must be taken into account. Various components is mounted on the frame. To enable mounting of components, the designspace 55mm on the outside of the frame is earmarked for fasteners and consoles and the ESS can not allocate this volume.

4.3.8 List of requirements

The requirements and desires established in the sections above have been compiled into a list of requirements. It is presented in appendix A

5

Concept development

Every product development project contains concept development in some shape or form. This project is no different. In the following chapter, the result from the concept generation is presented. It begins by presenting a functional analysis and discussion about the most critical sub-problem. The following sections deals with what the design space looks like, and how it can be utilized to create concepts. The chapter ends with presentation of concept generation and concept evaluating divided into two phases.

5.1 Functional Analysis

In order to develop a successful concept, all relevant requirements need to be taken into account. The requirements presented in the previous chapter were analyzed and formed the basis for the function analysis presented in fig. 5.1. The main functions for the ESS-pack is to store ESS-modules, protect from mechanical abuse, protect from thermal abuse, enable ESS connections and wiring.

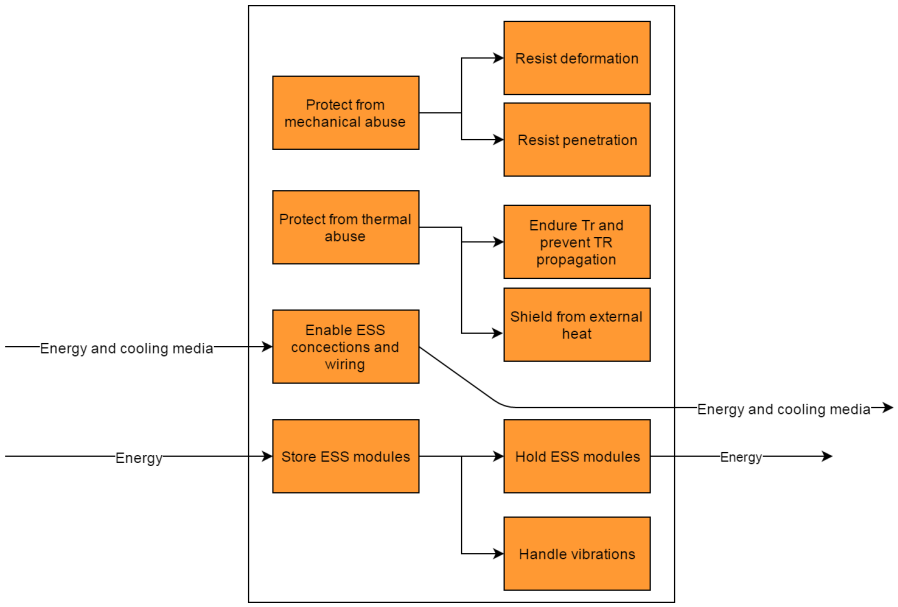


Figure 5.1: Functionanalysis of ESS-pack

The core problem when implementing ESS-packs onto a truck is how a large mass will affect the vehicle as a whole. In the field of mechanical engineering,

components as large as ESS-packs that are capable of powering heavy duty trucks have not been considered before within automotive use. Hence, the knowledge of how components with masses over 1 000 kg will affect a truck is very low, which in turn means that it is not easy to know which function that is most critical when designing an ESS-pack. However, considering the fact presented in section 3.4.1 that many previous projects similar to this thesis that have tried to focus on too many sub-problems at the same time, it was suggested by experienced people at Volvo to start with the core function of an ESS-pack, i.e. its ability to facilitate storage of ESS modules. This means considering requirements originating from the mechanical, product architectural and the packaging domains. This in order to validate that a concept is feasible in the first place. Thus, the other sub-functions displayed in fig. 5.1, namely: protecting the batteries from mechanical and thermal abuse as well as enabling ESS connections, can and have to be included at a later stage in the development process.

5.2 Concretization of designspace

To clarify and develop a general understanding of the problem, a rough geometrical model was developed. The functions described in the functional analysis generated the need for two designspaces, as can be seen in fig. 5.2. One designspace (marked in green) is intended for storage of ESS modules and the other is intended for protecting the ESS-pack from deformation and penetration.

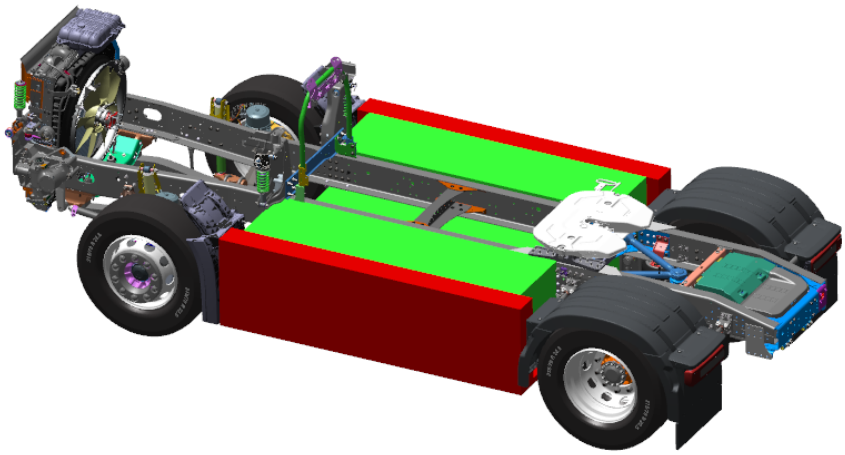


Figure 5.2: Initial division of designspaces

As was described in section 3.4.2, the green volume that is dedicated for the storage of ESS modules can be assumed to have certain characteristics. Depending on how it is divided up, the individual parts will have a packaging efficiency of 69%. This means that 69% of this space will be occupied with battery modules containing battery cells. This percentage has been calculated according to the method described in section 3.4.2. Also based on calculations presented in the same section, an individual part of the divided ESS design space can be assumed to have a density of 2000 kg/m^3.

5.3 Phase one: Initial modelling of four concepts

5.3.1 Concept generation

In order to explore the green designspace described earlier, the concepts displayed in fig. 5.3 were developed. These concepts builds on dividing the designspace in several different ways. This in order to investigate which form of division is the most beneficial.

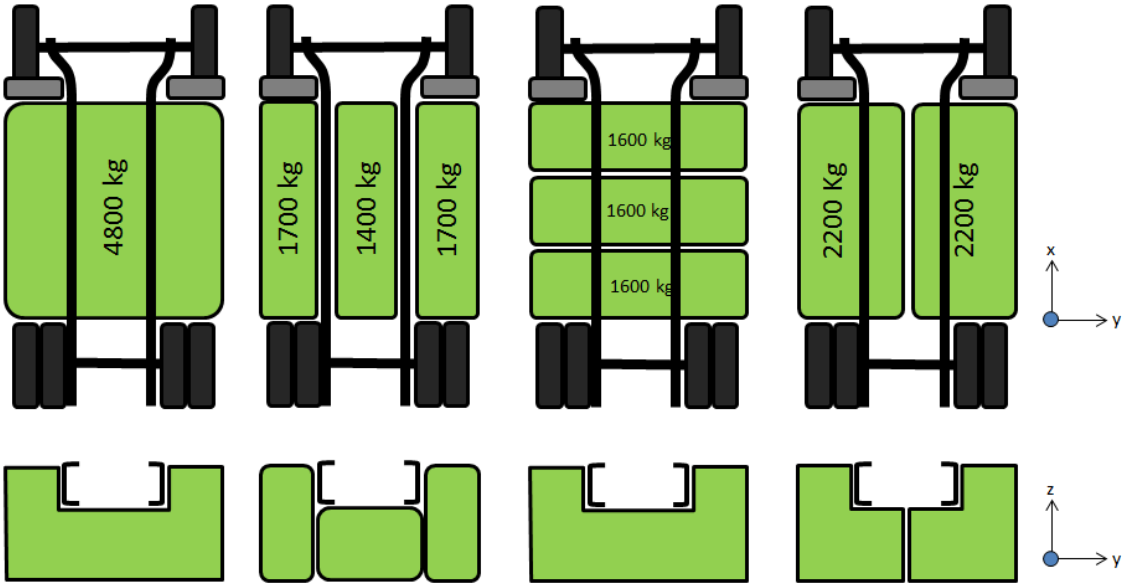


Figure 5.3: Geometrical division of design space (Concepts from left: Bigone, Parallel 3-piece, Perpendicular and Parallel 2-piece)

The concept that has been named "bigone", displayed at the far left in fig. 5.3 means treating the design space as one big component, i.e. a large ESS-pack. To the right of big one, the concept named "parallel" resides. This concept has the design space divided into three ESS-packs that are parallel to the frame. Further right the concept "perpendicular" is displayed. This concept has the design space divided into three ESS-packs, arranged perpendicular to the frame. Of course it is possible to imagine a scenario where the parallel and perpendicular concepts are divided into more than three pieces. However, for simplicity they are treated at this stage as a division into three parts. Last but not least, there is the parallel two piece concept. This divides the design space into two pieces that runs in parallel to the two frame sides. These pieces have a "step design", meaning that the two parts of the ESS-packs that runs underneath the chassis are still connected to their respective sides of the frame. All of the above mentioned concepts results in ESS-packs with weights ranging from 4 800 kg to 1 600kg per pack.

5.3.2 Concept evaluation

A feasible concept must not change the original function of the chassis. Components that are mounted on the chassis should therefore not add stiffness. Additionally, the ESS-packs are sensitive and must not be exposed to high levels of stress or excessive amounts of torsion. This means that, if an ESS-pack concept reduces the stress levels in the chassis or reduces the maximum displacement the ESS-pack is able to attain, loads that are intended to be handled by the chassis are transferred into the ESS-pack. The concept thus changes the characteristics of the chassis and is thereby infeasible.

In fig. 5.4 the von-mises stress for a chassis exposed to torsional load is presented. This is the reference used when evaluating the upcoming concepts. The maximum displacement of the empty chassis is 145mm in the point where the loads are applied. The maximum displacement will also be used as a reference when evaluating concepts. A plot of displacement of the chassis can be seen in appendix B.

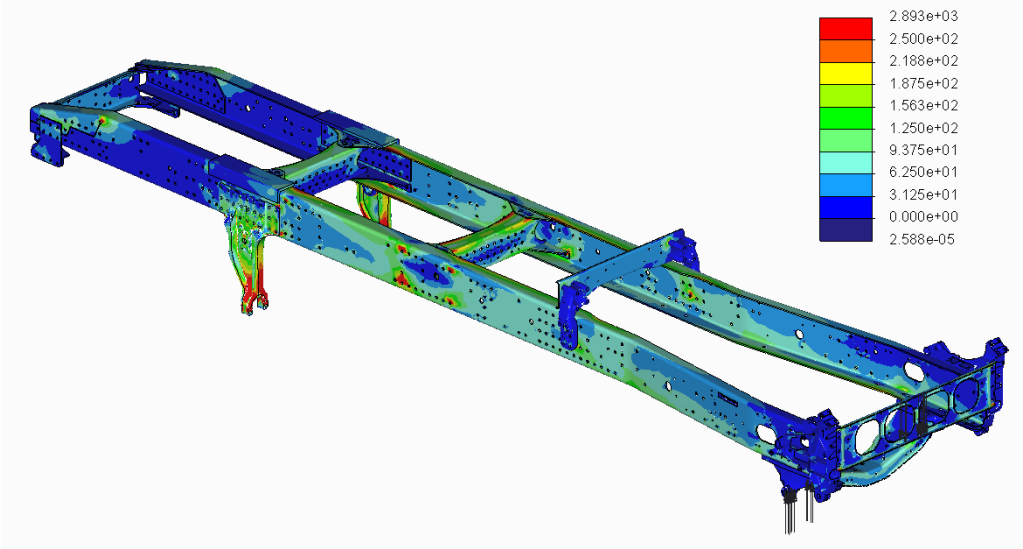


Figure 5.4: Von mises stress plot for chassis exposed to torsional load [Mpa]

As described in section 3.4.3 models of the four concepts presented above was created and evaluated. A full set of stress and displacement plots for the four concepts can be seen in appendix B to ease the understanding of the result presented below.

The concepts Bigone and Perpendicular Are similar and connects the left and right frame which results in adding rotational stiffness to the chassis. This results in decreased displacement and changed function of the chassis. The result for concept Bigone was evaluated as the most promising and the result is presented below. As seen in fig. 5.5 the stress levels are decreased in the rear end of the chassis and maximum displacement is reduced to 58 mm. In fig. 5.6 one can see that the stress level has been changed in the crossbars. The lower part of the crossbars have been unloaded and the force is now transferred to ESS-pack which is more stiff. Since the concept is adding torsional stiffness the concept is infeasible as it is modelled in this

simulation. If the concept would have been modelled with three attachment pints, like the Mercedes eActros introduced in the benchmark, the concept would not add as much stiffness and would thereby be feasible. The concept Bigone were therefore chosen to be further developed in phase two.

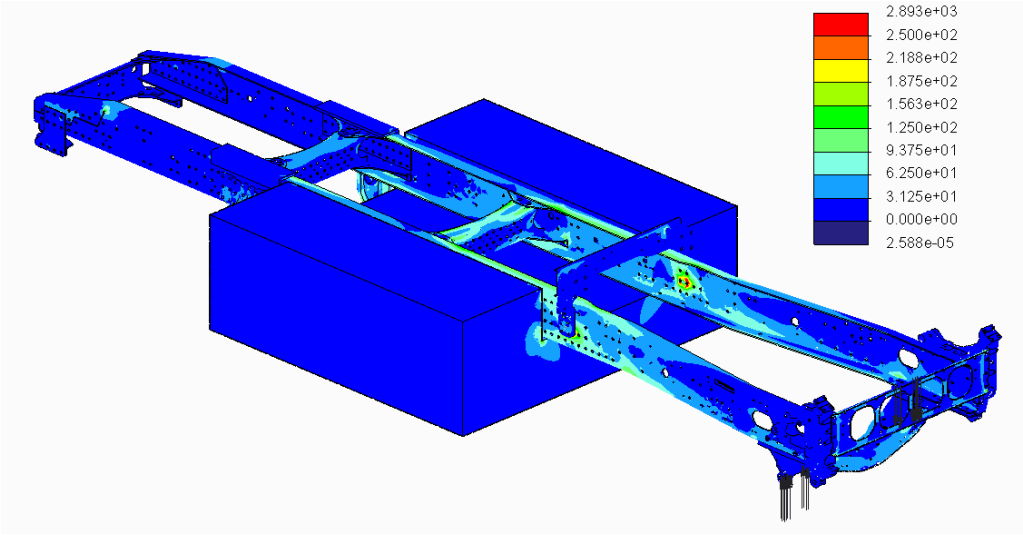


Figure 5.5: Von-Mises stress plot for concept Bigone exposed to torsional load

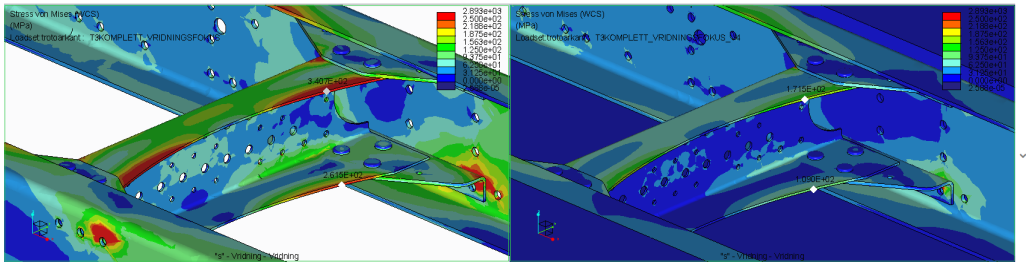


Figure 5.6: Von-Mises stress plot for cross member in the empty chassis (to the left) in the concept Bigone (to the right)[Mpa]

The concepts Parallel 2-piece and Parallel 3-piece are similar and are not connecting the left and right frame. In fig. 5.7 the the stress levels and the maximum displacement for the concept Parallel 2-piece are showed. The results are very similar to the referent frame and the concept seems feasible. Out of the two similar concepts the Parallel 2-piece was evaluated to have the most potential. The Parallel 2-piece handles the torsional load case well but will inevitably fail under the other standard load cases. Figure 5.8 illustrates what would happened if a gravitational load is applied to the concept. The two ESS-packs are not centrally mounted under the frames which will results in a bending moment and a clash between the two ESS-packs. A design like this will, in a similar way, be sensible in case of a side impact. As described to the right in the figure this could be rectified by connecting the two ESS-packs and avoid the clash and ease the stress in case of a side impact in a way that do not add rotational stiffness to the concept. With this in mind the concept parallel was chosen to be further developed in phase two.

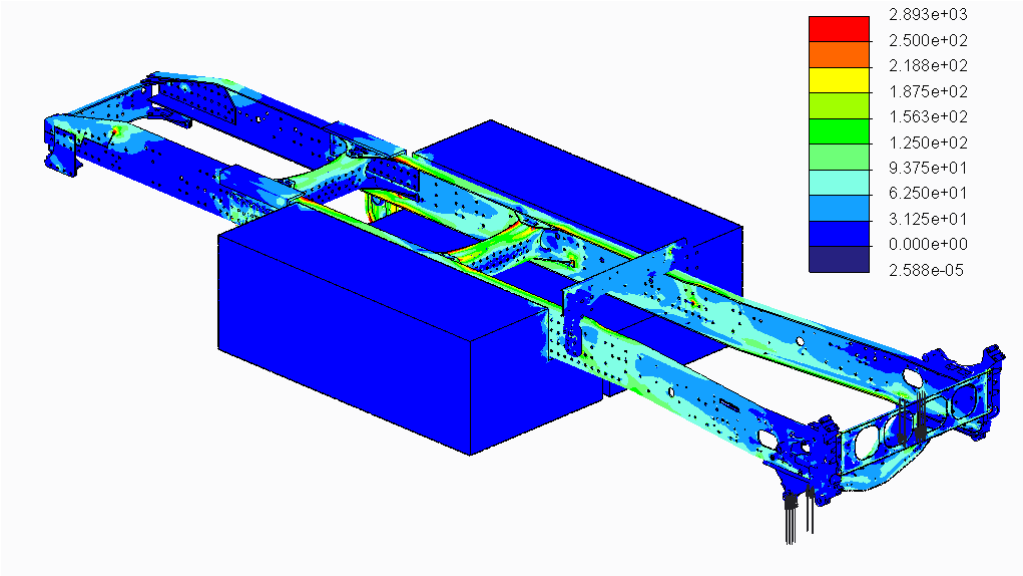


Figure 5.7: Von-mises stress plot for concept parallel two piece exposed to torsional load [mPa]

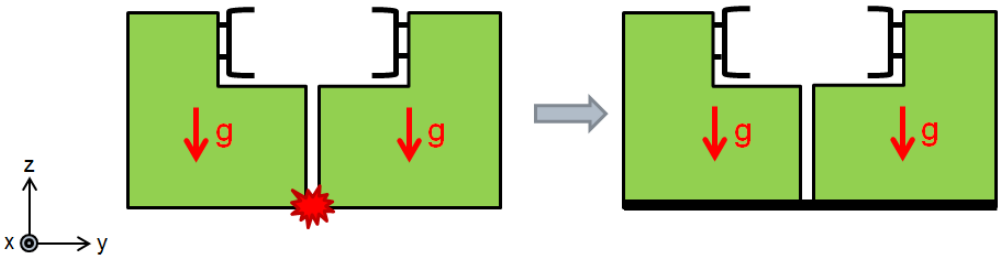


Figure 5.8: Cross section of the concept Parallel 2-piece

As a result of concept generation phase one the concepts Bigone and Parallel 2-piece have showed most potential and will be further developed and evaluated. Both concepts have not been designed and modeled to handle a complete set of the load which an ESS-pack will be exposed to and will therefor be further developed in Phase two.

5.4 Phase Two: Further modelling of two representative concepts

In phase two, Bigone and Parallel 2-piece were further developed. The concepts were slightly modified to improve the interplay between chassis and ESS-packs. During phase one, the most critical load case, the torsional load case, was evaluated. In phase two, more load cases where used to evaluate the concepts in order to further ensure their feasibility.

5.4.1 Bigone

In the way that the Bigone-concept was modelled in phase one, the concept added too much torsional stiffness to the chassis. By using three suspension points in stead of four the torsional stiffness added by the ESS-pack can drastically be decreased. This is a well known practise which has been used both for engine suspension for tractor and on Mercedes electrified eActros truck. The three point suspension can be seen in fig. 5.9. By using only one suspension point on the right side of the chassis, no torsional load will theoretically be transmitted from one side of the chassis to the other. The ESS-pack will thereby add no significant torsional stiffness to the chassis.

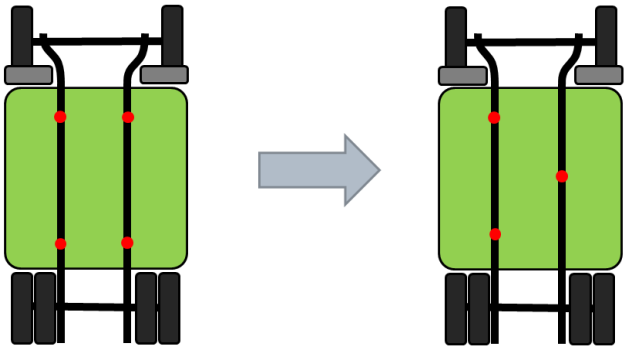


Figure 5.9: Four-point and three-point suspension for concept Bigone

In fig. 5.10 the simulation results are presented. By using a 3-point suspension, the stress levels in the ESS-pack are reduced. The stress levels in the chassis are very similar to ones in the reference frame. In fig. 5.11 the stress levels in the ESS-pack are presented. It can be concluded that the four-point suspensions results in added stiffness to the chassis and thereby increased stress levels in the ESS-pack. The 3-point suspension do not add stiffness to the chassis and the stress levels in the ESS-pack remains low. The increased stress level which can be seen for the 3-points concept is due to a boundary condition and can thereby be disregarded.

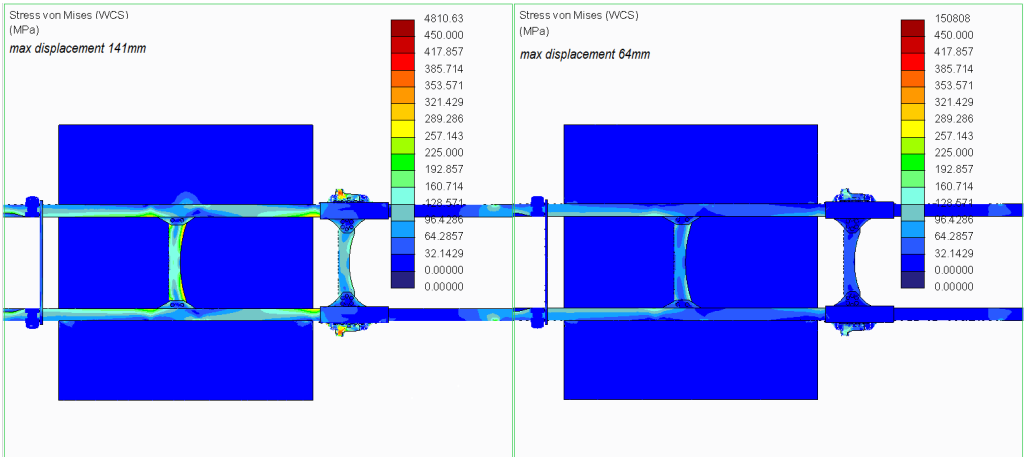


Figure 5.10: Stress plots for three-point (left in fig) and four-point suspension (right in fig) for concept Bigone exposed to torsion load case

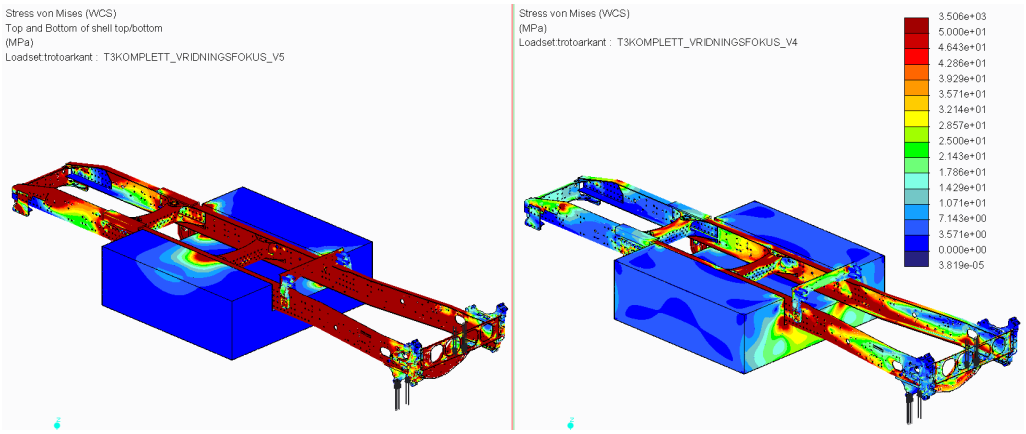


Figure 5.11: Stress plots for three-point (left in fig) and four-point suspension (right in fig) for concept Bigone, exposed to the torsion load case

When exposing the concept to the other standard loads derived from normal driving conditions, no other critical aspects where detected. The concept could therefore be considered as feasible at this stage.

5.4.2 Parallel 2-piece

The concept Parallel 2-piece handles the torsional load case well, but less so in other load cases. As described in fig. 5.8, the concept will fail when a gravitational load is applied. However, by coupling the two ESS-packs in the y-direction, the concept could possibly be improved to be able to handle a gravitational load without adding significant torsional stiffness to the chassis. Adding stiffness only in the y-direction could be achieved by using rubber bushings or adding a metal plate in the bottom of the ESS-packs. To verify this idea, the Creo model was configured. The ESS-packs were connected by two springs at the lower part. The springs where given the stiffness *1000 N/mm* in the y-direction and *100 N/mm* in the x and z-direction. In fig. 5.12 the result of the coupled and uncoupled ESS-packs exposed

to 1g gravitational load is presented. It can be concluded that the coupled ESS-packs yield negligible displacement and the stress levels are reduced. In fig. 5.13 where the torsional load case is applied it can be seen that the stress levels have not been reduces in the chassis. It can therefor be concluded that, by coupling the ESS-packs, the stress levels in a 1g load case can be reduced without adding stiffness to the chassis.

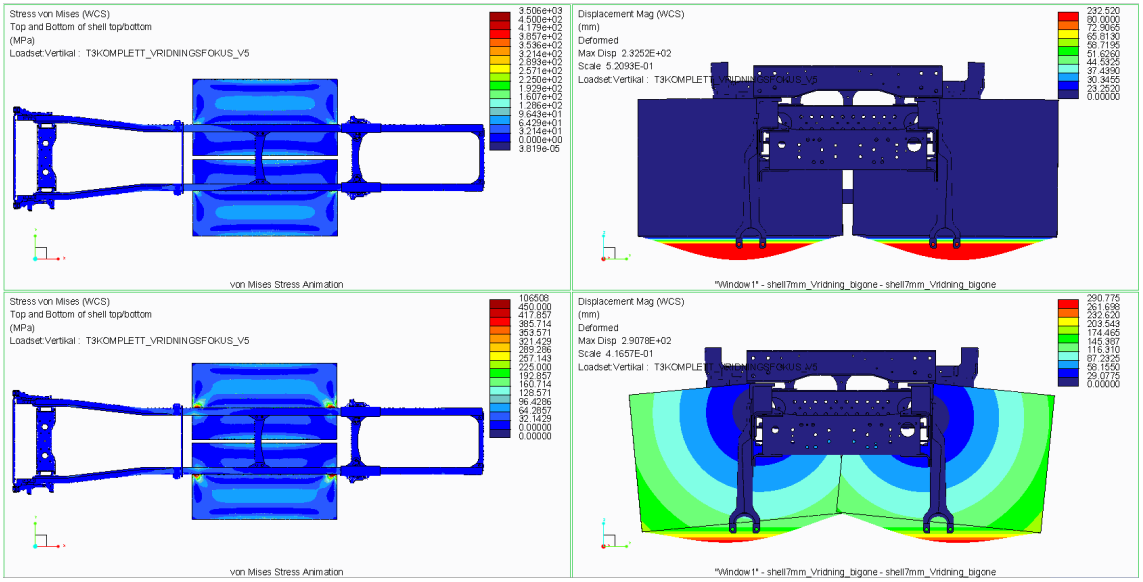


Figure 5.12: von-Mises and displacement plot for coupled and uncoupled packs exposed for 1 g Gravitational load.

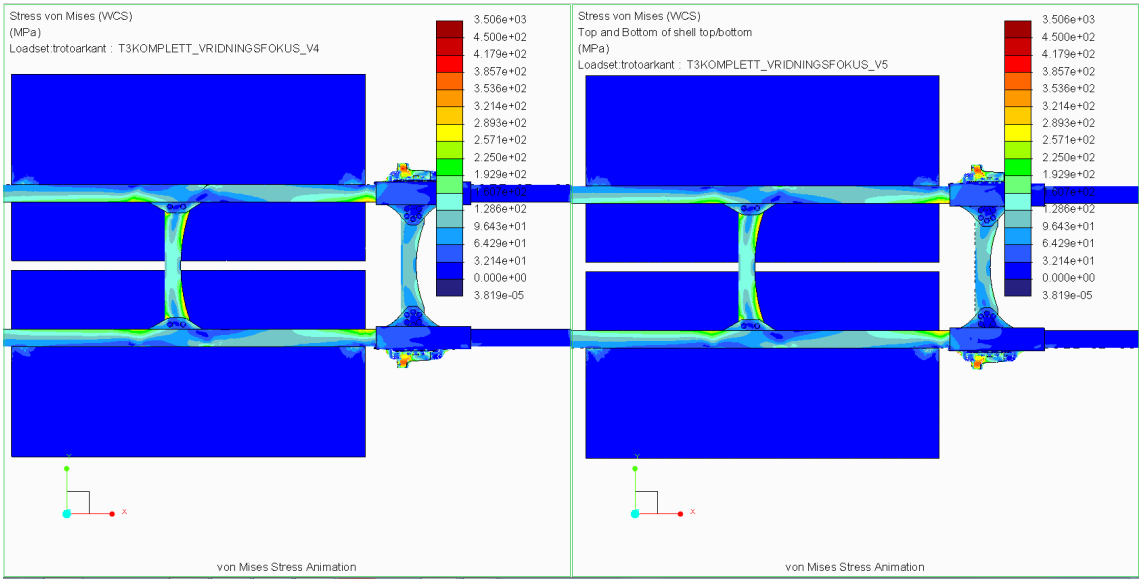


Figure 5.13: von-Mises and displacement plot for coupled and uncoupled packs exposed for 1 g Gravitational load.

5.4.3 Results

After evaluation, both of the two concepts demonstrates feasibility. The concepts have one thing in common, when torsional load is applied, neither of the concept adds stiffness to the chassis and the concepts allow relative motion between the chassis and the ESS-packs. By doing this, a large ESS can be implemented on a truck without changing the original function of the chassis. This since the concepts do not result in any critical stress levels when exposed to standard load cases derived from normal driving conditions. The two concepts enables this in different ways, but the outcome is the same. They have in common that stiffness is added in the directions where it is necessary and avoided where stiffness cannot be tolerated. Stiffness is needed to enable mechanical integrity and strength of the heavy ESS-pack.

To further evaluate the feasibility of the concepts and to evaluate which concept has the best potential, the natural frequency aspect must be taken into account. The natural frequency must be analyzed both for the complete vehicle, where the ESS-pack are modelled as black boxes and further with a defined design of the ESS-packs to investigate the design of the ESS it self. This in order to know how the ESS-packs influences the chassis and how an ESS-pack should be designed in order to meet the requirements.

When including more parameters and objectives as the size of the problem increases, it is impossible grasp all aspects of the it and find an optimal solution. There is therefore a need to implement multi-objective Optimization (MOO). The next chapter aims at describing a method of how MOO could be applied to the problem posed in this thesis.

6
Design optimization

When having to handle a large amount of variables and gain increased knowledge of ESS-pack design, the method of optimization could be a powerful tool. Since the problem presented in this project has contradicting objectives, it does seem suitable to use optimization. This chapter describes and discusses the early phases of an optimization study and the formulation of an initial problem statement. It also describes how design evaluation methods can be used to visualize results and how statistical methods can be used to evaluate correlations between different variables and objectives. The aim of the chapter is to show how design optimization can be used in a concept development process where it has not been utilized previously. The result of this chapter is thus an evaluation of how well suited optimization is for the posed problem, and not to find an optimal solution.

6.1 Initial problem statement

The first step in an optimization study is to define what problem is to be solved. This is done by defining objectives that are to be maximized or minimized, a procedure which is part of the formulation of the initial problem statement. Throughout the initial problem statement, one question is important to try and answer, and that is: how to evaluate "good design". This to ensure high quality of the optimization output.

As defined earlier, a concept for an ESS-pack must not change the function of the chassis. This has to be done without exposing the ESS-packs to harmful stresses. Since these objectives are contradicting, the problem therefore becomes a MOO problem. In order to formulate the objectives, the characteristics that must be present in a good ESS-pack design were listed. This in order to transform them into objectives that could be evaluated by the optimization model. For the optimization study, three objectives were defined. The first objective handled the characteristic that the ESS-pack must not add stiffness to the chassis. This can be evaluated by measuring stresses in the ESS-packs. Increased stresses in the ESS-pack means that stiffness is being added to the chassis. The *firsts* objective is therefore to minimize the maximum stress in the ESS-packs. Furthermore, the ESS-packs must not be exposed to harmful deformation, bending or twisting motions. Therefore, since the chassis of the truck twists while being used in normal conditions, this twisting motion cannot be allowed to be transferred to the ESS-packs. This means that the torsion of the ESS-packs is a critical measure. The *second* objective is thus to minimize torsion of the ESS-packs. Lastly, the natural frequency for an ESS-pack must not

be to high in order to avoid amplified oscillations. The *third* and last objective is therefore to maximize the first mode of the natural frequency of the ESS-packs.

During the simulations in chapter 5, maximum displacement for the concepts exposed to standard load cases were compared to an empty frame. This in order to evaluate if the concepts changed the original function of the chassis. During a discussion about the optimization model with a simulation expert at Volvo, it was concluded that evaluating stress levels and maximum displacement would evaluate the same thing. Thus, stress levels were chosen as the measurement.

Since in an optimization study a single objective optimization is preferred, it could beneficial to convert objectives to constraints. What initially can seem to be an objective might in some cases be more correct to define as a constraint. Minimizing stress levels is an example of an objective which might be converted from being an objective to being a constraint in some cases. This since, even though it is beneficial to decrease the stress levels, there is a level where the gain decreases and/or ceases to exist. The level of stress that the material of a component can handle is sometimes known, especially if the component is an iteration of a previous design. Thus it is of little benefit to decrease stress much further than that known level. This means that for an optimization with the aim of finding an optimal design it is beneficial to convert such objectives to constraints. However for an optimization with the goal of increasing the knowledge of the relationship between input variables and the performance of a component it can, on the contrary, be useful to use the objective. This is the reason why the three objectives where kept as objectives in this thesis. At this stage, an optimal design is not sought, but rather more knowledge about the problem.

6.2 Development of optimization model

When the objectives of the optimization were defined, the model that would form the basis for the optimization was developed. Since the model determines what objectives can be evaluated it is of highest importance to develop a model that can evaluate the concepts and objectives that have been defined.

For this optimization study the model developed included four ESS geometries and its connections to the chassis. To be able to simulate the four different concept generated in fig. 5.3, the designspace for the ESS-pack was divided into four geometries modelled as beam elements with similar properties as the ESS-packs in the simulation in chapter 5. The optimization model created is presented in fig. 6.1 and fig. 6.2. The four geometries were connected by four bushings, two in the longitudinal direction, Lo1 and Lo2, and two in the lateral direction, La1 and La2. The stiffness of these bushings could be varied from stiff to weak. A bushing with negligible stiffness represented two ESS-packs with no connection. A stiff bushing represented that the two geometries were connected. This meant that if all La and Lo bushings were stiff the concept "Bigone" would be simulated, and if the Lo bushings were stiff and the La bushings were weak, it would simulates the concept parallel 2-piece. This modelling of the ESS geometries enabled the optimization study to evaluate all of the concept generated in chapter 5. The bushings had translational stiffness in x, y and z direction, as well as torsional stiffness in x, y and z direction.

The translational stiffness for B1 is named B1TX, B1TY and B1TZ and the rotational stiffness B1RX, B1RY and B1RZ. To summarize, there were four bushings with six stiffnesses each, which resulted in 24 variables in total.

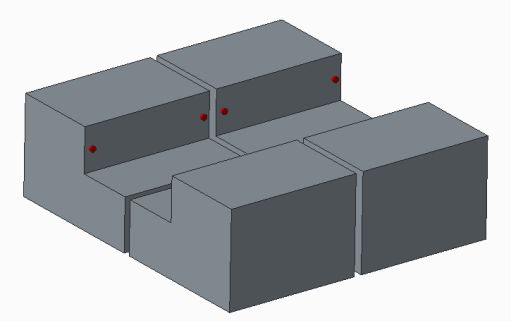


Figure 6.1: ESS-pack model used in optimization, iso-view

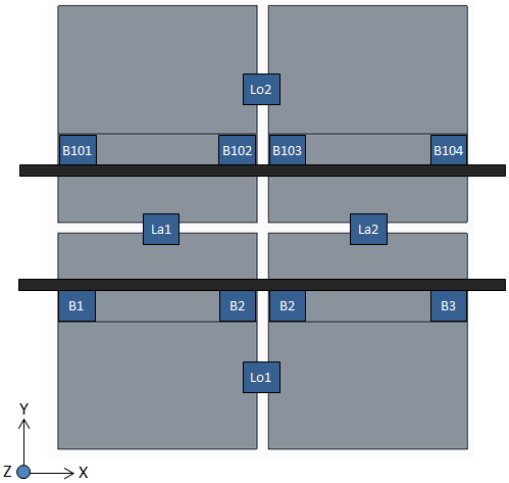


Figure 6.2: ESS-pack model used in optimization, top-view

The connection between the ESS-pack and the chassis was modelled using two bushings per ESS geometry. The bushing connecting the ESS-packs to the left side of the frame was named B1-B4 and the bushings on the right side B101-B104. These bushings could be varied from stiff to negligible stiffness. This enabled the optimization study to evaluate all variants of suspension that was developed in chapter 5. Each of these bushings had translational and rotational stiffness in x, y and z direction, which resulted in 48 variables. The optimized stiffnesses of these bushings must then be interpreted as bushings or mounting consoles that shall possess the properties that has been optimized.

The model was exposed to and evaluated under three different types of loads. The loads were the standard load cases defined in section 3.4.3, i.e. cornering, 1g vertical and torsional load.

In summary, the complete model consisted of four geometries connected by 72 variables which defined the 36 bushings. As stated earlier, it is not advisable to perform an optimization using a large number of individual variables, the rule of thumb is to use the approximately 10 variables. Mathematically it is possible to use 72 variables, but interpreting the results and implementing them into a design becomes very difficult. Also, the production of such a design would be impossible. Thus, in order to decrease the complexity of the optimization problem, a screening was performed. This in order to evaluate if there were variables in the model that had less or no influence on the objectives. However, when having conducted this optimization it could be concluded that no variable of any bushing could be considered as redundant.

If the 72 variables are varied individually both the optimization of the division of the ESS-pack, i.e. a topological optimization, and the stiffnesses of the suspension

is performed in one step. Topological optimization often requires that the result of the topological calculation is interpreted in order to yield a design that is possible to manufacture. The generic topological optimization process is illustrated in fig. 6.3. This process starts with a given designspace and boundary condition. The topological calculation then determines where material should be placed optimally to minimize the objective stated, which is minimize weight in the case presented in fig. 6.3. The result from the topological calculation must then be interpreted to enable a design that is possible to manufacture.

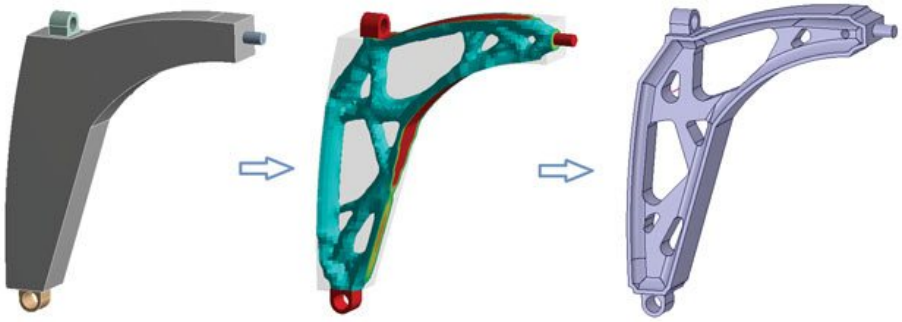


Figure 6.3: The process for a topology optimization[65]

6.2.1 Coupling of variables

The step of interpreting topological results in order to yield a design that is possible to produce is present in the optimization of ESS-pack design as well as in the generic optimization process. If all 72 variables are individually optimized, the result is a design which is not possible to produce. One way of solving this problem is to decouple the topological optimization and the stiffness optimization.This can be done by giving multiple variables the same properties. Say for example that, instead of varying five variables independently the variables can instead be given the same values. This reduces the number of variables from five to one. This way of reducing the number of variables will hereby be referred to as coupling the variables.

By coupling all variables connecting the ESS to the chassis, i.e. all Lo bushings and all La bushing, the number of variables could be reduced from 24 variables to three bushings times six stiffnesses, i.e. a total of 18 variables. This optimization setup is graphically presented in fig. 6.4. The boxes represents bushings and the color of the bushings represents which bushings are coupled. The bushing were coupled in this way in order to reduce the complexity and ease the interpretation of the result. By doing this, it can be verified that the optimization model is working.

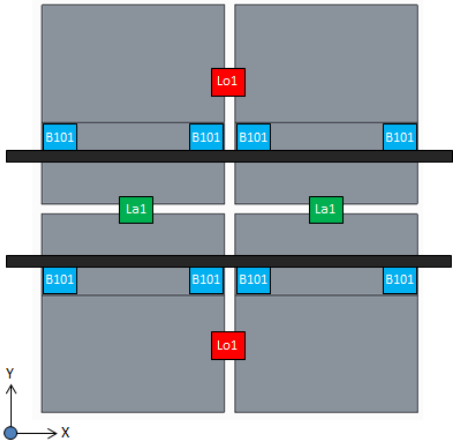


Figure 6.4: Model setup for initial optimization

6.3 Interpretation of optimization results and further develop an optimization model

An optimization based on this model was then performed using the software modeFrontier. The optimization was left to run for 600 generations and the algorithm used was MOGA-II. The original subset of input values was based on a latin hybercube sampled DOE with a sample size of 100. For more information about optimization algorithms and how to set up an optimization study using modeFRONTIER, please refer to literature about optimization algorithms. The result of the optimization presented below intends to describe the analytical tools available for interpreting optimization results in order to further develop an optimization model.

6.3.1 Correlation analysis

For an optimization study the correlations between input variables and objectives can be investigated. This is enabled in modeFRONTIER by the function called "Scatter matrix". Correlation analysis is a statistical evaluation method that requires a good set of data in order to yield a good result. To verify that a set of data is good enough to use this tool, i.e. to verify that the result of a correlation analysis is correct, the correlation between variables can be investigated. If the correlation analysis shows no correlation between the two variable that are supposed to have no correlation, it is verified that the set of data is of sufficient quality, and the result of the other correlations can be trusted.

In fig. 6.5 the result of the Scatter matrix for the run described in section 6.3 is presented. A correlation coefficient close to 1 means that two variables are directly correlated and a correlation coefficient close to 0 means that there is no correlation. A negative value means that there is an inverse correlation[66]. By looking at the result in the matrix, it can be concluded that there is no mutual correlation between variables. This means that the optimization result that the analysis is based on is good enough and that the result is credible. It can also be seen in the figure that there

are stiffnesses that stands out in how much they influence one ore more objectives. This means that these variables are correlated with these objectives.



	B101TX	B101TY	B101TZ	La1TX	La1TY	La1TZ	Lo1TX	Lo1TY	Lo1TZ	max_Eigen	min_Stress	min_Tor...
B101TX												
B101TY	-0.001											
B101TZ	-0.002	-0.001										
La1TX	0.001	0.002	-0.002									
La1TY	0.000	-0.001	0.002	0.003								
La1TZ	0.001	-0.001	0.003	-0.001	0.002							
Lo1TX	-0.001	0.001	0.000	0.003	-0.001	-0.000						
Lo1TY	0.000	0.001	0.001	-0.003	-0.000	0.000	0.004					
Lo1TZ	0.002	-0.000	0.000	0.002	-0.003	0.002	0.004	0.003				
max_Eigen	0.100	0.429	0.163	0.041	0.419	0.031	-0.034	-0.051	0.030			
min_Stress	0.564	0.257	0.187	0.353	0.017	-0.007	0.041	0.114	0.020	0.456		
min_Torque	-0.025	0.201	0.749	-0.010	0.036	0.253	0.016	0.141	0.209	0.363	0.222	

Figure 6.5: Scatter matrix analysis in modeFRONTIER

The function "sensitivity analysis" in modeFRONTIER is similar to scatter matrix. However, sensitivity analysis can handle data set with poorer quality[66]. The sensitivity analysis presents the variables with the greatest influence on an objective. The result of a sensitivity analysis for the objective maximize eigenvalue is presented in fig. 6.6. This bar-chart lists the variables with the greatest correlations to one specified objective. The chart shows the eleven variables with the greatest correlations to the objective of minimizing the first mode of the natural frequency of the ESS-packs. The first four variables can be considered to influence the objective and the rest of the variables can be considered have no influence on objective. The four variables with the greatest influence on the objective can also be found in the correlation matrix in fig. 6.5

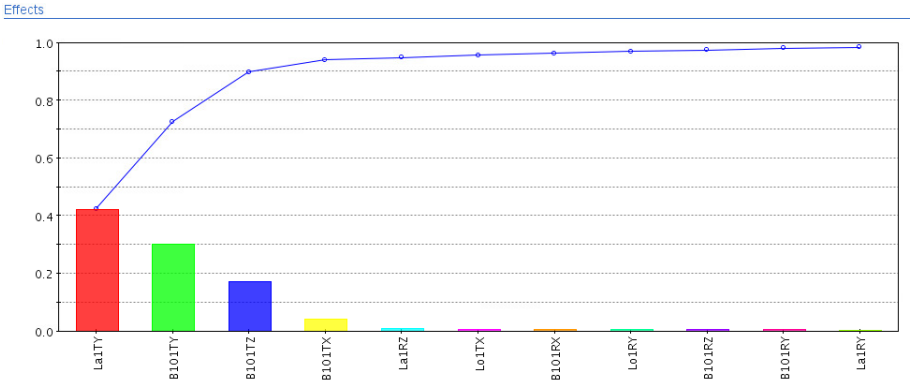


Figure 6.6: Sensitivity analysis for the objective max eigenvalue

Variables with no influence on the objective are unnecessary and can therefore be converted to constants. As a result of the sensitivity analysis, knowledge about which variables that have influence on the design of the component can increased. In fig. 6.7 all of the variables and their correlations to the objectives are presented. A cell marked in green indicates that a variable have influence on an objective. A cell marked in white indicates that a variable have no considerable influence. If a variable have no influence to any objective the variable have no influence on the

overall design. Such a variable can be converted to a constant. The figure shows that nine of the variables have no considerable influence on the model. These variables were therefore translated to constants, which reduced the total amount of variables in the model described earlier from eighteen to nine. This reduction of complexity in turn reduced the computational time required and simplified the interpretation of the optimization results even further.

Variable Name	max_Ei...	min_Str...	min_Tor...
B101RX	0.007	0.006	0.004
B101RY	0.005	0.000	0.001
B101RZ	0.005	0.014	0.001
B101TX	0.043	0.567	0.000
B101TY	0.302	0.085	0.061
B101TZ	0.172	0.069	0.725
La1RX	0.001	0.002	0.002
La1RY	0.004	0.001	0.001
La1RZ	0.008	0.010	0.005
La1TX	0.004	0.203	0.016
La1TY	0.423	0.007	0.001
La1TZ	0.002	0.003	0.071
Lo1RX	0.004	0.001	0.001
Lo1RY	0.006	0.006	0.001
Lo1RZ	0.001	0.002	0.001
Lo1TX	0.008	0.004	0.001
Lo1TY	0.002	0.019	0.034
Lo1TZ	0.003	0.000	0.073

Figure 6.7: Result of sensitivity analysis

6.3.2 Scatter chart and Pareto front

For MOO where multiple objectives exist, the scatter chart in modeFRONTIER is a powerful tool to visualize how set of designs corresponds to two or three objectives. In a scatter chart, every single design evaluated in the optimization is plotted. In fig. 6.8, fig. 6.9 and fig. 6.10 scatter charts from modeFRONTIER is showed, each design being represented by a square. Two of the charts presents distinct Pareto fronts, as described in section 2.1.5. The third chart have non-contradictory objectives, which results in a lack of a Pareto front.

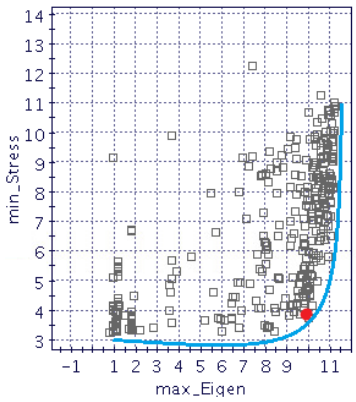


Figure 6.8: Scatter chart for objectives min stress and max natural frequency

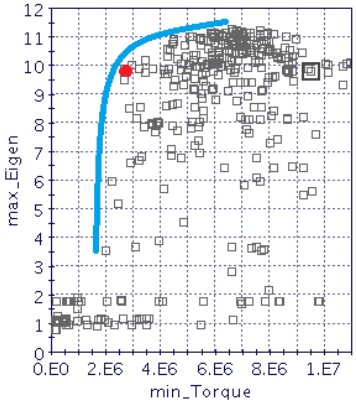


Figure 6.9: Scatter chart for objectives max natural frequency and min torque

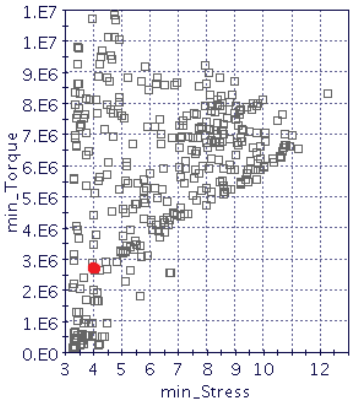


Figure 6.10: Scatter chart for objectives minimizing torque and min stress

fig. 6.11 presents a three dimensional scatter chart, where all three objectives are shown. This enables visual evaluation of all three objectives at the same time. Since a distinct knee point exist it is possible to find an design which is optimal in the case where extreme weightings are counted of. An extreme weighting could be that one objective is weighted to 90% and the other only 5% each. However, a 90-5-5 weighting is very rarely used in actual optimization cases. The optimal design is highlighted with a red dot in fig. 6.8, fig. 6.9, fig. 6.10 and fig. 6.11 where it is obvious that the design is good in three of the aspects and the optimal design in two of them.

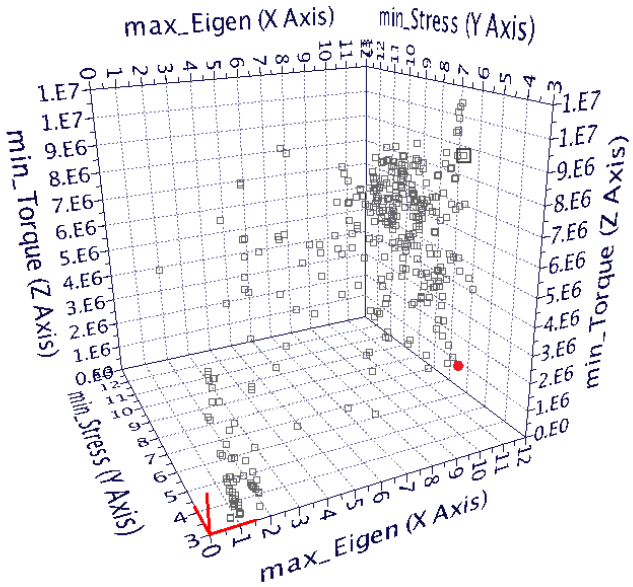


Figure 6.11: Scatter 3D chart

6.3.3 Parallel coordinate analysis

A tool that is helpful in filtering and investigating variable behaviour is the parallel coordinate chart in modeFRONTIER. This tool is very powerful when analyzing multi-variable data. The tool shows all chosen variables and objectives in vertical bars, where each design is represented by a line that connects all vertical bars by its value. In fig. 6.12, three parallel coordinate charts are shown, with the three objectives being represented on the three vertical bars. The colored lines in the left chart represents the designs which is the result of the optimization. The designs can be filtered by increasing or decreasing the limit for an objective. In the middle chart the lower limit for the natural frequency is increased, which excludes the designs with the lowest natural frequencies. By increasing or decreasing the different limits, knowledge can be gained about mutual relationships between parameters and objectives.

In the chart to the right, the lower limit of the natural frequency have been increased and the upper limit for stress and torsion have been decreased until only a few designs are left. From this figure it can be concluded that the solution that is evaluated as optimal is the same solution that was evaluated as optimal by the Pareto fronts displayed earlier.

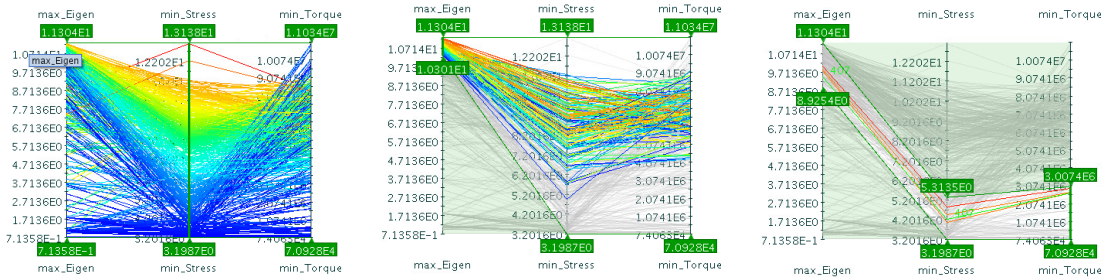


Figure 6.12: Parallel coordinates analysis in modeFRONTIER

When an optimal design is found, the values of its input variables must be investigated. In this process, the parallel coordinate chart, can again be a powerful tool, enabling the visualization of the values of the input variables. In the initial phase of an optimization process, it can be can be helpful to sort out the variables with low correlation and visualize the important variables in a parallel coordinate chart. This eases the process of interpreting the result compared to when the stiffnesses of all variables are shown. In fig. 6.13, the variables evaluated as important in the sensitivity analysis are shown, and the optimal design is highlighted. The stiffnesses that define the optimal solution are marked with red dots. Using this chart it is simple to understand the tendencies of the input variables for the optimal design.

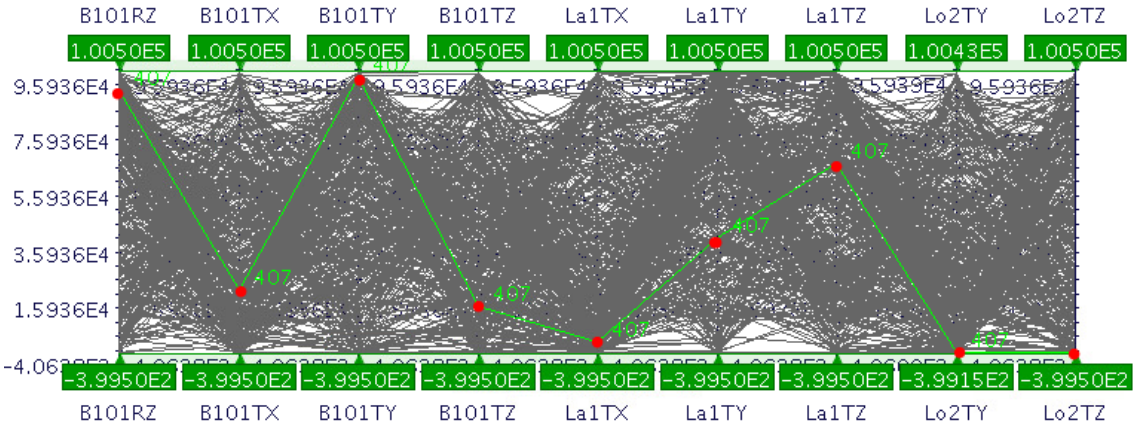


Figure 6.13: Scatter matrix analysis in modeFRONTIER

6.4 Summary of optimization and recommendation for further work

In the context of designing an ESS-pack for a fully electric heavy duty truck, were multiple objectives and many variables exist, optimization is a powerful tool. In a case were little is known about a problem, optimization can be both helpful in the process of exploring the problem, as well as help finding an optimal design. The most important phase of an optimization is initial problem formulation. In order to ensure the quality and reliability of an optimization result, it is of highest importance formulate the problem correctly. In this phase it is important to mathematical describe what is "good design". The statistical and design parameter based tools for analyzing the optimization results available in the optimization softwares are very good tools in order to increase the knowledge of how design parameters are correlated and how they influence the performance of a product.

This chapter has showed the potential of using optimization in a product development process. Optimization offers new possibilities and expands the product development toolbox in ways that conventional use of simulations can not. The optimization method that have been developed can be implemented in concept development at Volvo trucks in order to deeper understand, evaluate and optimize designs. The work done during this thesis have proved the the benefits of implementing optimization for such a project. For further work the method must be applied to actual concepts to further understand and develop the optimization model as well as starting taking advantage of the benefits that optimization offers.

7
Discussion

To be able to successfully perform product development for a cross-functional product and implement a novel technology, it is of highest importance that knowledge about the new technology, as well as knowledge of the context were the technology is to be implemented is present. Also, throughout the project it is continually clear that tight communication between the project group and specialist within relevant subjects is important. This in order to understand and balance the many aspect of this project. Thus, if a team was to be handpicked for a future project like this, it would be of great importance to gather a cross functional team with competences that complete each other.

The uncertainty linked to the novelty of electric vehicle technology have been difficult to manage. This project would have benefited from a closer communication with the electromobility department at Volvo. However, since electrification is developing at a high rate, it has been difficult to gain access to this department. This fact leads to that, for some subjects such as EMC (electromagnetic compatibility), the knowledge and understanding about it is low. Thus, decisions that have to do with issues regarding subjects such as EMC might not be entirely correct. This can in turn affect the validity of the result of the project.

When a radical change, like the transition from ICE to electric propulsion is implemented, the uncertainties for all stakeholders increases. The communication within a company between departments such as product planning, product design is becoming increasingly important. Also the communication between the company and its suppliers become even more vital, this because the work, progress and decision making of departments within the company and its suppliers is affected by each other. Thus, when electric propulsion is to be implemented, no project or task assignment can be completely isolated.

Since the scope of this project was open, the knowledge about the subjects that would become part of it were limited at the start. Also since new technology were to be implemented, it was important to do a wide research during the initial phase of the project. As a result of this wide research, the project needed to be narrowed down and focused on the most critical sub- problems. As a result of the great uncertainties linked to electrification the uncertainties aggravated the process of distinguishing the most critical sub problem.

The choice of methodology is important when planning any project. During this thesis project, the importance of if having high rate of iteration and fast development cycles have been shown. This in order to create a steeper learning curve[5] and achieve better results. Good prerequisites have been created through continuous dialog with persons with the competences needed.

In the process of evaluating concepts, the literature on product development proposes the use of evaluation matrices. It was concluded that for complex mechanical concepts, as the concepts described in chapter 5, it was not possible to evaluate different designs without the involvement of FE-analysis. Both FE analysis and optimization is often introduced at a later stage in the product development process. However, in this thesis it was clear that these methods could be used advantageously in the concept generation phase.

8

Conclusion

This thesis consists of several parts. The first part is a literature review of battery and electric vehicle technology. This information then forms the base of a list of requirements for an energy storage system (ESS) that is implemented on a truck. The mechanical requirements of this list is then incorporated into an ESS packaging concept development that revolves around finding a suitable division and mounting of ESS-packs on a 4x2 Volvo Trucks tractor. The knowledge gained during this concept development are then used to create a method of generating mounting and divisioning of ESS concepts using design optimization.

The literature review revealed that Li-ion batteries are currently the most widely used battery technology within the automotive industry. It is clear however that there are some safety issues concerning Li-ion batteries that has to be solved in order for the technology to stay relevant in the future. The focus needs to be shifted from Li-ion battery optimization focusing largely on achieving higher energy densities towards making the batteries safer.

Furthermore, it can be concluded that most energy storage system solutions incorporate into vehicles today consist mainly of parts that are purchased of the shelf. Added to this is the fact that the companies producing the energy storage systems are very secretive towards their clients regarding the internal architecture and specifics of their products. Thus, another important factor for the evolution of electric trucks is a closer and more open collaboration between original equipment manufacturers and battery manufacturers. This would decrease the uncertainty that the secrecy of the current battery manufacturer imposes on the OEM's. An uncertainty which affects OEM development all the way from the very beginning to the end of the product development process.

When implementing an ESS-solution on a truck it is important to consider the negative effects of mounting large and heavy components on the chassis, such as problems with them adding torsional stiffness and having low natural frequencies. Since the frame itself on for example a Volvo Truck is made to be torsionally forgiving, the ESS solution that is implemented must allow this, without adding to much stiffness. On the other hand, if the mounting and mechanical composition of the ESS were to have a to low stiffness, there will be problems with low natural frequencies. However, despite these contradicting requirements, according to the results presented in section 5.4.3, it seems possible to implement a large ESS-pack on the current Volvo Truck chassis configuration without changing the core function of the chassis.

As stated in section 5.1 it is important to solve the most critical sub-problems first when developing an ESS concept. The finite element simulation model created

was therefore designed to display results related to the most critical sub-problem, i.e. the stress and displacement that occurs when the generated ESS-concepts are mounted on the chassis of a truck and subjected to the forces present during normal use. These simulations showed that the ESS and its mountings needs to be designed with respect to what stiffness is added in which directions. In some directions stiffness is needed, whilst in other directions it must be avoided.

First and foremost, the optimization part of the thesis made it clear how powerful the tool design optimization can be. This not only with respect to finding an optimum solution to a problem, but also exploring all possible solutions of a problem and raising the understanding of how design aspects affects the performance of a design. The optimization study also revealed the importance of answering the question, "what is good design?" as well as the essence of spending a plurality of the time creating the initial problem formulation. This means attending to issues such as: what variables to include, what objectives are to be minimized or maximized, and what constraints are necessary to implement. If an optimization problem is not well formulated, the result will neither make any sense nor show a valid result, many times without the user being aware of this.

Regarding the optimization method development, it was concluded that when using optimization for a complex problem variables must be chosen with care. The optimization model must not have to many variables in order for the result to be interpretable and for the optimal design to be produced in a feasible way. An emphasis was therefore laid on restricting the number of input variables through analyzing correlations between input variables and objectives.

This work yielded in an optimization model for topology and mounting for an ESS implemented on a tuck. This can be further developed and used to evaluate and find an optimal design. For product development handling complex products it has been proved that it is advantageous to use optimization and to implement it in the early phases of a concept generation.

9

Future recommendations

Optimization is a very powerful tool when trying to understand and solve complex problems with multiple objectives and many variables. This thesis proves that there is great potential in implementing optimization in the process of developing a packaging concept for an fully electric heavy duty truck. Optimization allow analysis and methods that conventional ways of using simulation do not allow. During this project it has been shown that the product development methods used by design engineers at Volvo can be greatly improved if optimization can be introduced at an early stage in the design process. However, there is a threshold in terms of optimization competence that must be overcome in order to implement optimization correctly. It should therefore be investigated how optimization can be implemented at Volvo and how competence can be obtained in the subject.

The optimization model created during this thesis has shown the potential in optimization and what knowledge that can be obtained by an optimization model. For future work we recommend to use this model to start evaluating different types of concepts. However, further work would be preferable to increase knowledge of the problem itself as well as result in the development of an optimal design.

As the optimization model is designed today, there are some shortcomings. The objectives that defines what is "good design" can be further investigated. As mentioned in section 6.1, other objectives evaluating similar behaviour can be used. Which of these that describes "good design" in the best way needs to be further investigated.

The model is designed to evaluate concept in a certain way. By varying stiffnesses, different topological concepts and mountings can be evaluated. It should be investigated if this is the best way of modelling different concept or if there is another way. This since, although it was chosen to vary stiffnesses, it would be possible to use materials and geometries as variables to evaluate concepts in a different way. For further work we recommend to use the optimization model as it is modelled today to obtain more knowledge about the problem. However, in the future, a more complex model may be required and thus other ways of modelling the problem should be investigated.

Bibliography

[1] Volvo Group. Volvo group presentation. https://www.volvogroup.se/content/dam/volvo/volvo-group/markets/global/en-en/about-us/Volvo-Group-Presentation.pdf, 2018.

[2] Volvo Trucks. Volvo lastvagnar – volvo fh16 parkerad. http://www.volvotrucks.se/content/dam/volvo/volvo-trucks/masters/euro-6/volvo-fh-16/media-gallery/2326x1310-media-gallery-volvo-fh16-parked.jpg, 2018.

[3] T. Ulrich, K and D. Eppinger, S. *Product Design and Development*. McGraw-Hill, New York, NY, 2012.

[4] Hans Johannesson. Professor chalmers. Lecture in Axiomatic Design, September 2016.

[5] C. Wheelwright, S and B. Clark, K. *Revolutionizing Product Development*. Chalmers University of Technology, Gothenburg, Sweden, 2015.

[6] W. Eckard. Advantages And Disadvantages Of FEM Analysis In An Early State Of The Design Process. *Creative Engineering Services*, 2017.

[7] Y. Panos and D. Wilde. *Principles of Optimal Design*. CAMBRIDGE UNIVERSITY PRESS, The Edinburgh Building, Cambridge CB2 2RU, UK, 2000.

[8] Wikipedia. Multi-objective optimization. https://en.wikipedia.org/wiki/Multi-objective_optimization, 2018.

[9] OICA. Climate change and co2. http://www.oica.net/category/climate-change-and-co2/, 2018.

[10] B. Scrosati, J. Garche, and W Tillmetz. *Advances in Battery Technologies for Electric Vehicles*. Woodhead Publishing, Langford Lane, Kidlington, UK, 2015.

[11] ISO6469-3. Electrically propelled road vehicles - Safety specifications - Part 3: Protection of persons against electric shock. https://www.iso.org/standard/45479.html, 2011.

[12] A. Hussainb A. Mohamedb M.A. Hannana, M.S.H. Lipub. A review of lithium-ion battery state of charge estimation and management system in electric vehicle applications: Challenges and recommendations. *Renewable and Sustainable Energy Reviews*, 78:834–9854, 2017.

[13] M. Andwaria, A, A. Pesiridisa, S. Rajooc, R. Martinez-Botasd, and V. Esfahanianb. A review of Battery Electric Vehicle technology and readiness levels. *Renewable and Sustainable Energy Reviews*, 78:414–430, 2017. doi: http://dx.doi.org/10.1016/j.rser.2017.03.138.

[14] Liu. Huaqiang. Thermal issues about li-ion batteries and recent progress in battery thermal management systems: A review. *Energy Conversion and Management*, 150(15):304–340, 2017. doi: https://doi.org/10.1016/j.enconman.2017.08.016.

[15] K. Lebeau, J. Van Mierlo, P. Lebeau, O. Mairesse, and C. Macharis. The market potential for plug-in hybrid and battery electric vehicles in Flanders: a choice-based conjoint analysis. *Transportation research. Part D, Transport and environment*, 17(8):592–597, 2012. doi: https://doi.org/10.1016/j.trd.2012.07.004.

[16] KT. Chau, CC. Chan, and C. Liu. Overview of Permanent-Magnet Brushless Drives for Electric and Hybrid Electric Vehicles. *IEEE Transactions on Industrial Electronics*, 55(6):2246–2257, 2008. doi: http://dx.doi.org/10.1109/TIE.2008.918403.

[17] T. Chau, K. *Electric Vehicle Machines and Drives: Design, Analysis and Application*. 2015.

[18] Lindholmen Science Park. Elbussen – tyst, avgasfri och passagerarvänlig. `https://www.electricitygoteborg.se/node/19499/om-elbussen`.

[19] U.S. Department of energy. Timeline: History of the electric car. `https://energy.gov/articles/history-electric-car`, Last checked 2018.

[20] H. Budde-Meiwes, J. Drillkens, B. Lunz, J. Muennix, J. Rothgang, S. Kowal, and U. Sauer, D. A review of current automotive battery technology and future prospects. *Journal of Automobile Engineering*, 227(5):761–776, 2013. doi: https://doi-org.proxy.lib.chalmers.se/10.1177/0954407013485567.

[21] Battery University. BU-105: Battery Definitions and what they mean. `http://batteryuniversity.com/learn/article/battery_definitions`, last checked 2018.

[22] Battery University. BU-1007: Net Calorific Value. `http://batteryuniversity.com/learn/article/bu_1007_net_calorific_value`, last checked 2018.

[23] MIT Electric Vehicle Team. A Guide to Understanding Battery Specifications. `http://web.mit.edu/evt/summary_battery_specifications.pdf`, December 2008.

[24] G. Pistoia and B. Liaw. *Behaviour of Lithium-Ion Batteries in Electric Vehicles*. Springer International Publishing AG, Cham, Switzerland, 2018.

[25] C. Mikolajczak, M. Kahn, K. White, and R. Thomas Long. *Lithium-Ion Bat-*

teries Hazard and Use Assessment. Springer, New York Heidelberg Dordrecht London, 2011.

[26] Hans Greimel. Why toyota offers 2 battery choices in next prius. http://europe.autonews.com/article/20151128/COPY/311289998/why-toyota-offers-2-battery-choices-in-next-prius, 28 november 2015.

[27] Battery University. Bu-104a: Comparing the battery with other power sources. http://batteryuniversity.com/learn/article/comparing_the_battery_with_other_power_sources, Last checked 2018.

[28] Clean Technica. Batteries keep on getting cheaper. https://cleantechnica.com/2017/12/11/batteries-keep-getting-cheaper/, 11 December 2017.

[29] Battery University. Bu-204: How do lithium batteries work? http://batteryuniversity.com/learn/article/lithium_based_batteries, last checked 2018.

[30] Battery University. Bu-104b: Battery building blocks. http://batteryuniversity.com/learn/article/bu_104b_building_blocks_of_a_battery, Last checked 2018.

[31] jalopnik.com. This is what fiery tesla model s death looks like. https://jalopnik.com/this-is-what-fiery-tesla-model-s-death-looks-like-1440143525, Last checked 2018.

[32] abcnews.go.com. 13,900 hoverboards recalled for battery fire risk. http://abcnews.go.com/US/13900-hoverboards-recalled-battery-fire-risk/story?id=51149295, Last checked 2018.

[33] X. Feng, M. Ouyang, X. Liu, L. Lu, Y. Xia, and X. He. Thermal runaway mechanism of lithium ion battery for electric vehicles: A review. *Energy Storage Materials*, 10:246–267, 2018. doi: 10.1016/j.ensm.2017.05.013.

[34] S. Wilke, B. Schweitzer, S. Khateeb, and S. Al-Hallaj. Preventing thermal runaway propagation in lithium ion battery packs using a phase change composite material: An experimental study. *Journal of Power Sources*, 340:51–59, 2017.

[35] H. Maleki and JN. Howard. Internal short circuit in Li-ion cells. *Journal of Power Sources*, 91:568–574, 2009.

[36] Akasol. Akasystem Oem. https://www.akasol.com/en/akasystem-oem, last checked 2018.

[37] Samsung. Automotive batteries. http://www.samsungsdi.com/automotive-battery/products/battery-module.html, last checked 2018.

[38] SA123. Commercial vehicles. http://www.a123systems.com/automotive/markets/commercial-vehicles/, 2018.

[39] Panasonic. automotive-battery. https://eu.industrial.panasonic.com/products/batteries-energy-products/automotive-battery, 2018.

[40] Xavier Iracabal. Saft project manager - mobility. Email communication, March 2018.

[41] Sondre Landvik. Volvo senior design engineer. Personal communication, february 2018.

[42] Orhan Alankus. Technology forecast for electrical vehicle battery technology and future electric vehicle market estimation. *Advances in Automobile Engineering*, 6:1–5, 2017.

[43] L. Zeng, W. Li, Y. Jiang, and Y. Yu. Recent progress in li–s and li–se batteries. *RARE METALS*, 36:339–364, 2016.

[44] Transportstyrelsen. Mått och vikt. https://www.transportstyrelsen.se/sv/vagtrafik/Yrkestrafik/Gods-och-buss/Matt-och-vikt/, last checked. (Only available in Swedish).

[45] Volvo bodybuilder instructions. http://vbi.truck.volvo.com/index.php.

[46] Thomas D Gillespie. *Fundamentals of Vehicle Dynamics*. Society of Automotive Engineers, Inc., Warrendale, PA, USA, 1992.

[47] Sebastién Ragot. Volvo senior analyst. Personal communication, january to june 2018.

[48] H. Rothbart and T. Brown. *Mechanical Design Handbook, Measurement, Analysis, and Control of Dynamic Systems*. McGRAW-HILL, 2006.

[49] Legal Information Institute. fmvss 214. https://www.law.cornell.edu/cfr/text/49/571.214, 1990.

[50] Swedish National Road Administration. Vvfs1994:22, 1994.

[51] L. Guoxing and Y. Tongxi. *Energy Absorption of Structures and Materials*. Woodhead Publishing, 1993.

[52] Arora. Shashank. Review of mechanical design and strategic placement technique of a robust batterypack for electric vehicles. *Renewable and Sustainable Energy Reviews*, 160:31319–1331, 2016.

[53] Chalmers tekniska högskola. Chalmers library database. https://chalmers.summon.serialssolutions.com/#!/, 2018.

[54] Lindroth Peter. Vehicle analyst, multi-criteria optimization. Personal communication, may to june 2018.

[55] Mercedes. Sustainable, fully electric and quiet: Mercedes-benz eactros to roll out to customers in 2018. https://www.daimler.com/documents/investors/news/capital-market-releases/daimler-mercedes-benz-ir-release-en-20180221-1.pdf, 2018.

[56] teslamotorsclub.com. Analyst: Tesla semi prototypes live up to performance claims. https://teslamotorsclub.com/tmc/threads/analyst-tesla-semi-prototypes-live-up-to-performance-claims.104407/, 2018.

[57] SAE J2289. Electric-Drive Battery Pack System: Functional Guidelines. https://saemobilus.sae.org/content/j2289_200807, 2008.

[58] SAE J1673. High Voltage Automotive Wiring Assembly Design. https://saemobilus.sae.org/content/j1673_199607, 1996.

[59] SAE J2344. Guidelines for Electric Vehicle Safety. https://saemobilus.sae.org/content/j2344_201003, 2010.

[60] Oxford University Press. ambient temperature. https://en.oxforddictionaries.com/definition/ambient_temperature, last checked 2018.

[61] SAE J2464. Electric and Hybrid Electric Vehicle Rechargeable Energy Storage System (RESS) Safety and Abuse Testing. https://saemobilus.sae.org/content/j2464_200911, 2009.

[62] SAE J2910. Recommended Practice for the Design and Test of Hybrid Electric and Electric Trucks and Buses for Electrical Safety. https://saemobilus.sae.org/content/j2910_201404, 2014.

[63] Hella Marine. IP Ratings. http://www.hellamarine.com/en/technology/ip-protection, last checked 2018.

[64] Pär Åhlström. Typer av produktionsprocesser. Handout in course: "LMT968 Industriell ekonomi och organisation" at Chalmers University of Technology, 2014. (Only available in Swedish).

[65] padtinc.com. Additive manufacturing – back to the future! http://www.padtinc.com/blog/tag/topology-optimization, 2018.

[66] modeFRONTIER. modefrontier tutorials. Available thru modeFRINTIER software, 2018.

A

Appendix: List of requirements

Spec. no.	R/D	Specification	Target value	Origin of requirement
		MECHANICAL SAFETY		
MS1	R	The ESS-module must not be deformed in any way		
MS2	R	The ESS-module must not be pierced by external influence		
MS3	R	The restraints should retain the orientation and position of the modules during vehicle operations or in case of crash event		J2289
MS4	R	Endure Mechanical vibrations defined by Volvo while maintaining normal operation requirements		
MS5	R	Battery systems and components should withstand automotive shock effects. This includes shock induced by shipping and handling, component installation, in-use operation, and crash.		J2289 5.4.1
MS6	R	HV cables and cooling hoses must not be influenced in a negative way during mechanical loading		
	R	HV cables and cooling hoses must be ovelengthed in order to handel displacement of component in case of crash event.		
MS7	R	Components of the ESS-pack must be designed to avoid resonance and excitation		
MS8	D	The ESS-pack should be designed to minimize the risk of a liquid to enter the ESS-pack in case of deformation of ESS-pack		
		THERMAL SAFETY		
TS1	R	Any critical failure must not affect the safety of driver		
TS2	R	Any critical failure must not affect the safety of peoples neareby		
TS3	R	A TR event should not significantly affect the structural characteristics of the ESS-pack		
TS4	R	A TR event should not lead to electrical shock		
TS5	D	A TR in a ESS-module shall propagate to adjacent ESS-modules		J2464
TS6	R	The ESS pack must be able to vent gasses in case of increased internal pressure		
TS7	R	The overpressure-funktion must not be affected in case of crash		
TS8	R	Potential smoke and flames from overpressure release function must be be guided and controled.		
TS9	R	The ESS pack must endure ambient air cycling between 70 °C to –40 °C without damaging any functions and paying epscial attention to seals.		J2464
		ELECTRICAL SAFETY		
ES1	R	Electrical isolation of the battery pack from the vehicle chassis, and both external and internal to the pack should be provided regardless of operating mode including exceptional circumstances.		J2289 6.5
ES2	R	The ESS pack must handle Condensate due to ambient conditions		
ES3	R	In case of leakage of cooling media shorcicuit must be prevented		
ES4	R	Conectors should not be placed in a an area where Water or road debris is expected		J1673 3.6.3
ES5	R	HV components must not be accesible for uncertified persons		
ES6	D	harness		J1673 3.6.5
ES7	R	Emergency personell be able to readily identify and de-energize the high voltage system without removal of any panels or use of special tools.		J 29.10 4.1.3
ES8	D	De-energize switch is recomended to be placed on top or side of ESS-pack		J 29.10 4.1.3
ES9	R	If hazardous voltages are contained within a conductive exterior case or enclosure that may be exposed to human contact as installed in the vehicle, this case should be provided with a conductive connection to the vehicle chassis.		J2344 4.3.4

PRODUCT ARCHITECTURE AND PACKAGING				
PA1	D	The ESS-pack must be mounted in a possition where no significant deformation or penetrations is expected.		
PA2	D	The ESS pack must be designed and mounted in a way that batterymodules is not exposed to deformation, warping or bending during regular use.		
PA3	R	The ESS must be designed in a way that a liquid can not be contained on the surface the ESS pack.		
PA4	R	Concept must allow suifficinet space four wiring and cooling tubes. Ensure over-length and protective routing of HV and cooling hoses		
PA5	D	Minimum bending radius of an assebled cable should be 5x diameter of the cable.		J1673 3.6.4
ENVIRONMENTAL WORKING CONDITIONS				
EWC1	R	The completed battery pack should be capable of surviving to the manufacturer's durability requirements, which could include: Battery electrolyte or other fluids for electrochemical system used, Salt water, Salt spray, Salt Mist atmosphere, and Mud bath.		J2289 5.4.3
EWC2	R	Components of battery pack systems should be specified and tested for resistance to normal automotive fluids. Among these are: gasoline, diesel fuel, antifreeze, transmission fluids, brake fluid, windshield fluid, battery electrolyte, salt water, and carwash soap.		J2289 5.4.5
EWC3	R	The ESS pack sall be protected to the protectiongrade IP6K9K.		J2464
MAINTENANCE				
MT1	R	The ESS shall stand a certain amount of heavy handeling during manufacturing, assembly, operation and maintanance without affekting any functionality	1kg droped from 1m	
MT2	R	All connectors conected by hand shall have a adequate hand clearence	25 mm	Volvo
MT3	D	An ESS pack should be practical to handle in assembly and maintanance situation. An ESS module should be exchangeable during service.		
MT4	R	ESS pack does not have to facilitate internal visual inspection by end-user		
MT5	R	Clearances on the vehicle that are adequate to enable easy installation or removal of a battery pack should be verified during vehicle design to simplify service operations		J2289 5.2
MANUFACTURING AND ASSEMBLY				
MF1	R	The component geometry must be designed in such a way that mass production is economically feasable		
MF2	R	The materials of the components must be selected in such a way that mass production is economically feasable		
MF3	D	Assembly of the design shall be easy resulting in low cost		

B

Appendix: Simulation Results Phase One

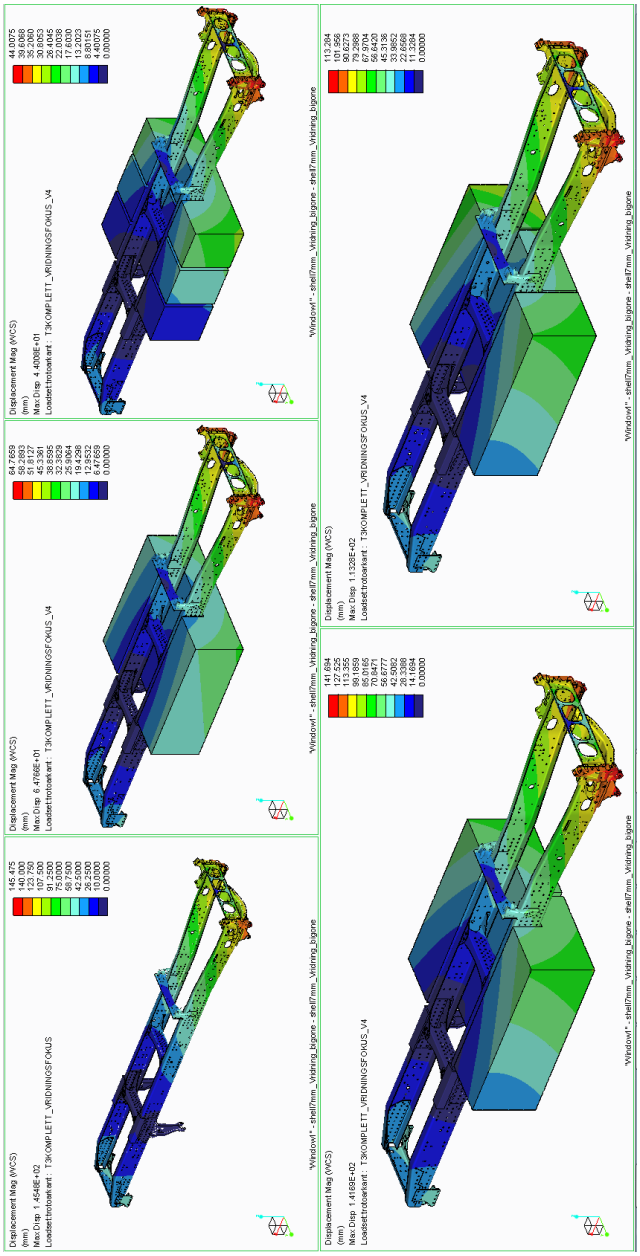


Figure B.1: Von-Mises stress plot for chassis and 4 concepts exposed to torsional load, Top-view [Mpa]

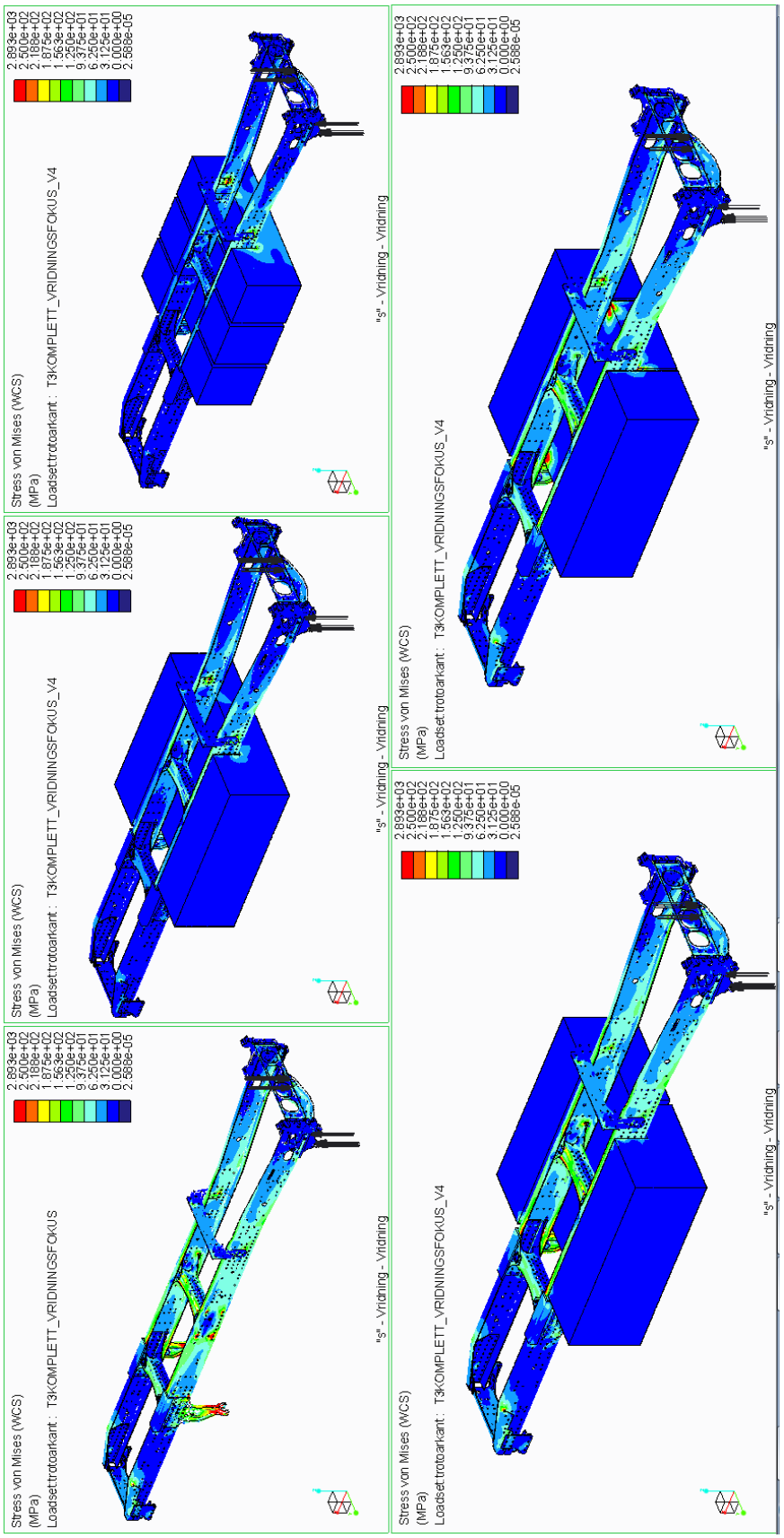


Figure B.2: Von-Mises stress plot for chassis and 4 concepts exposed to torsional load, Iso-view [Mpa]

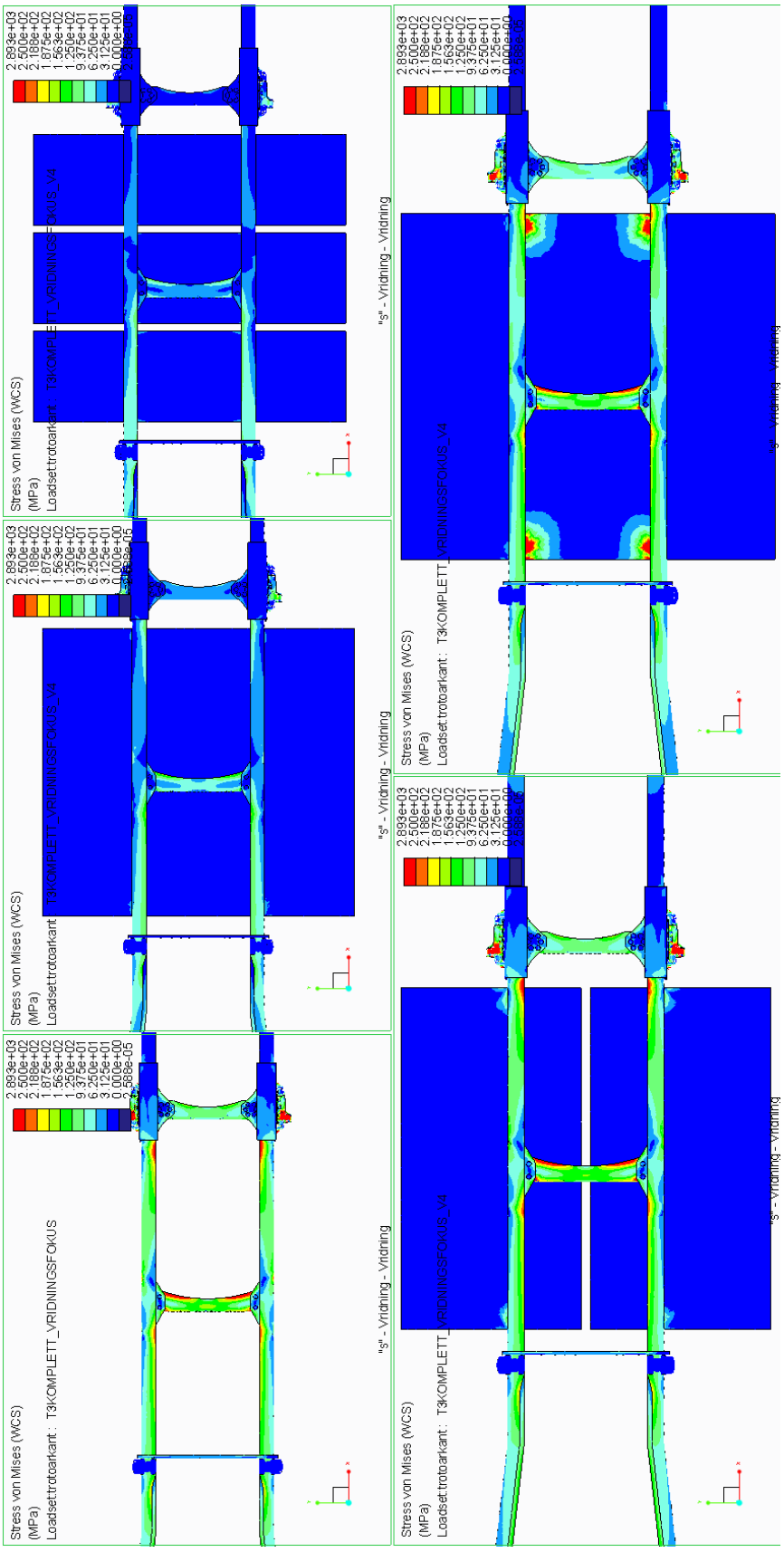


Figure B.3: Von-Mises stress plot for chassis and 4 concepts exposed to torsional load, Top-view [Mpa]

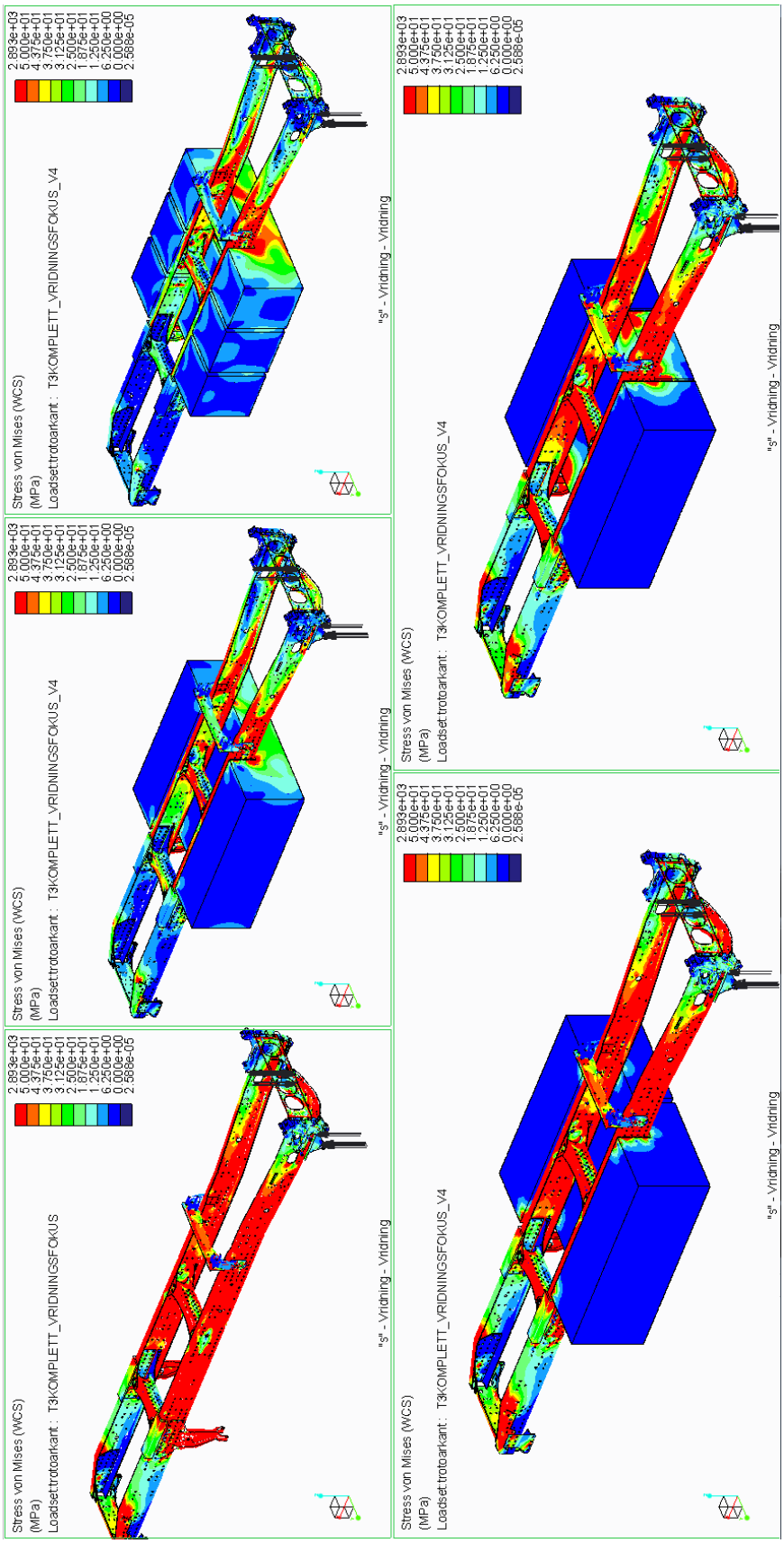


Figure B.4: Von-Mises stress plot - stress levels in ESS packs for four concepts exposed to torsional load[Mpa]